SEATTLE COMPUTER
1114 Industry Dr. Seattle WA 98188 206/575-1830

Disk Master™ Disk Controller

For the S-100 Bus

SEATTLE COMPUTER
1114 Industry Dr. Seattle WA 98188 206/575-1830

Disk Master™ Disk Controller

For the S-100 Bus

(c) Copyright Seattle Computer Products, Inc.
February 1984

If you have comments about this product or this manual, please complete the Comment Form at the back of the manual and return it to Seattle Computer Products, 1114 Industry Drive, Seattle, WA 98188.

DiskMaster™ is a trademark of Seattle Computer Products, Inc.

Part Number 900-001299

TABLE OF CONTENTS

Chapter 1. Introduction.....1

Features.....2

Chapter 2. Switch and Jumper Settings.....3

Bus Interface Switches and Jumpers.....5

PORT ADDRESS Switch.....5
INTERRUPT Jumper.....6
WAIT Jumper.....6
DMA PRIORITY Switch.....7
DMA Jumper.....7

Disk Interface Jumpers and Headers.....8

AUTO MOT/SM AUTO/ON Jumper.....8
LARGE MOT ON Jumper.....8
MOT ON Jumper.....8
MOTOR OFF DELAY Jumper.....9
HEAD LOAD Jumper.....9
FAST SEEK Jumper.....9
PRECOMP Jumper.....9
Pin 18 Jumper.....10
8-Inch Drive Configuration Header.....10

Chapter 3. I/O Ports.....11

Auxiliary Command Port.....11

DMA WRITE Bit.....11
DMA ENABLE Bit.....12
RESTORE Function Bit.....12
PRECOMP ENABLE Bit.....12
SMALL DRIVE Bit.....13
DOUBLE-DENSITY Bit.....13
SIDE Bit.....13
DS1 and DS0 Bits.....13

Auxiliary Status Port.....14

DISK CHANGE Bit.....14
TWO-SIDED/SEEK COMPLETE Bit.....14
HEAD LOAD Bit.....14
INTERRUPT REQUEST Bit.....14

Wait Synchronization Port.....15

Contents

Appendix A. Western Digital Data Sheet.....17

Appendix B. Schematic.....53

Appendix C. Specifications.....55

CHAPTER 1. INTRODUCTION

The Seattle Computer DiskMaster™ gives system designers a flexible, high performance floppy disk controller for the S-100 (IEE-696) bus. The DiskMaster supports both 8-inch and 5.25-inch floppy disk drives.

As many as four 8-inch and four 5.25-inch drives, in any combination, may be controlled simultaneously by a single DiskMaster. This makes it easy to transfer data between 8-inch and 5.25-inch disks within the sytem.

A patent-pending digital data separator design provides unsurpassed data recovery reliability. This digital technique enhances data recovery reliability over older, less accurate analog techniques. As a result, the DiskMaster has a wider tolerance for the varying read/write data speeds of floppy disks from other systems.

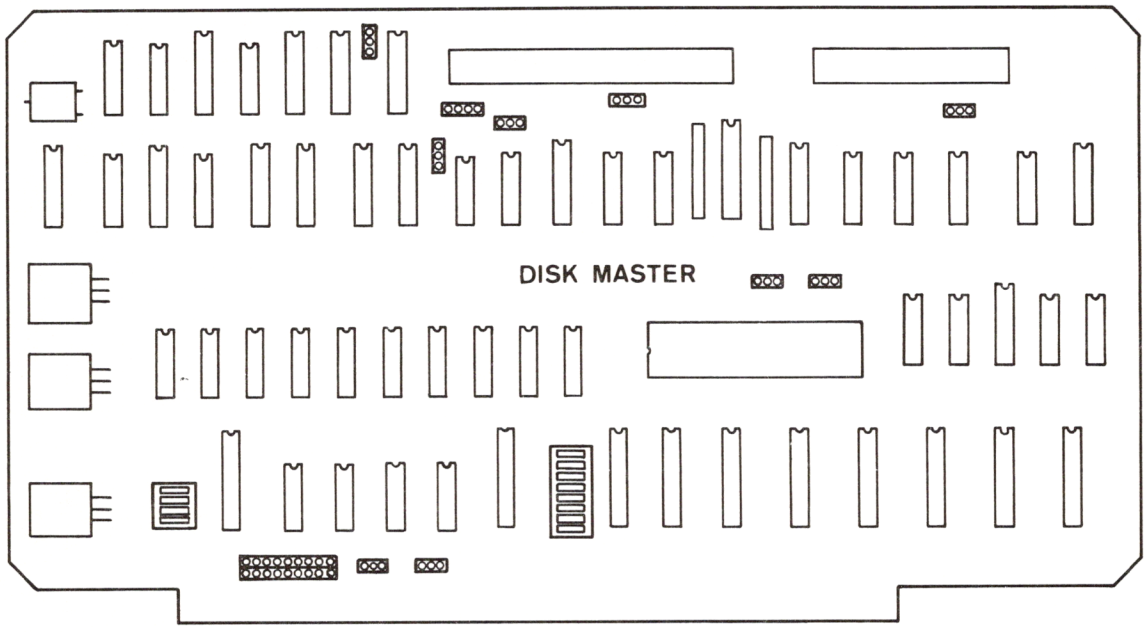

FEATURES

- Handles up to eight disk drives, four 8-inch **and** four 5.25-inch.
- Physically and electrically separate connectors for 8-inch and 5.25-inch disk drives to eliminate crosstalk and overloading of signal drivers.
- Configuration header to handle the different pin arrangement of 8-inch drives.
- Complete automatic hardware support for disk drives with voice-coil head positioners.
- Complete automatic hardware support for disk drives with spindle-motor control.
- A breakthrough in data separator design for unsurpassed data-recovery reliability (patent pending).
- Based on the Western Digital 1793 disk controller chip. (The data sheet for the 1793 chip is found in Appendix A.)
- Full compliance with the IEEE-696 standard.
- Direct Memory Access capability when combined with Seattle Computer's Direct Memory Access Controller board.
- Allows easy transfer of data and software between 8-inch drives and 5.25-inch drives.

CHAPTER 2. SWITCH AND JUMPER SETTINGS

Switch and jumper locations are shown on this page and the next page.

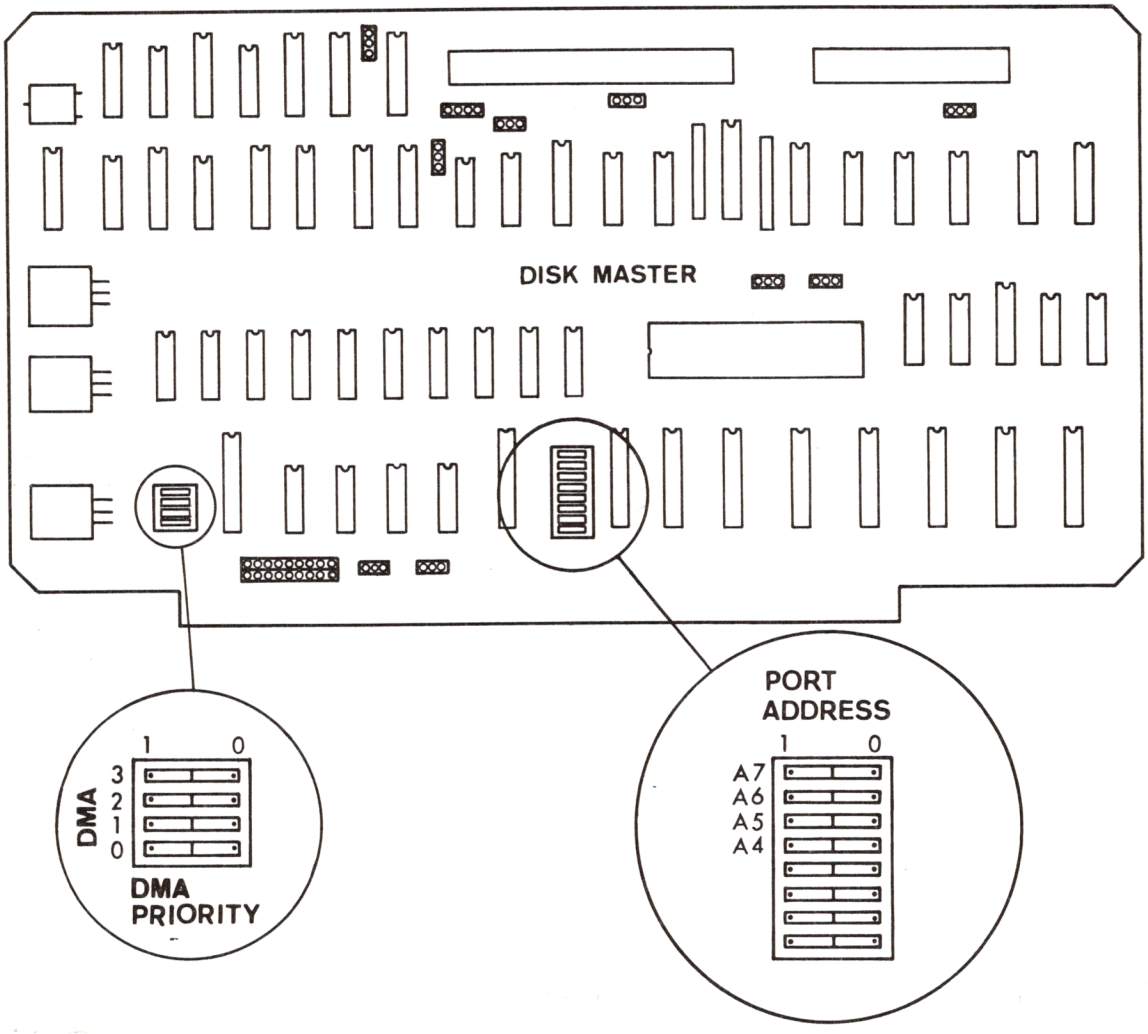

DiskMaster Switch Locations

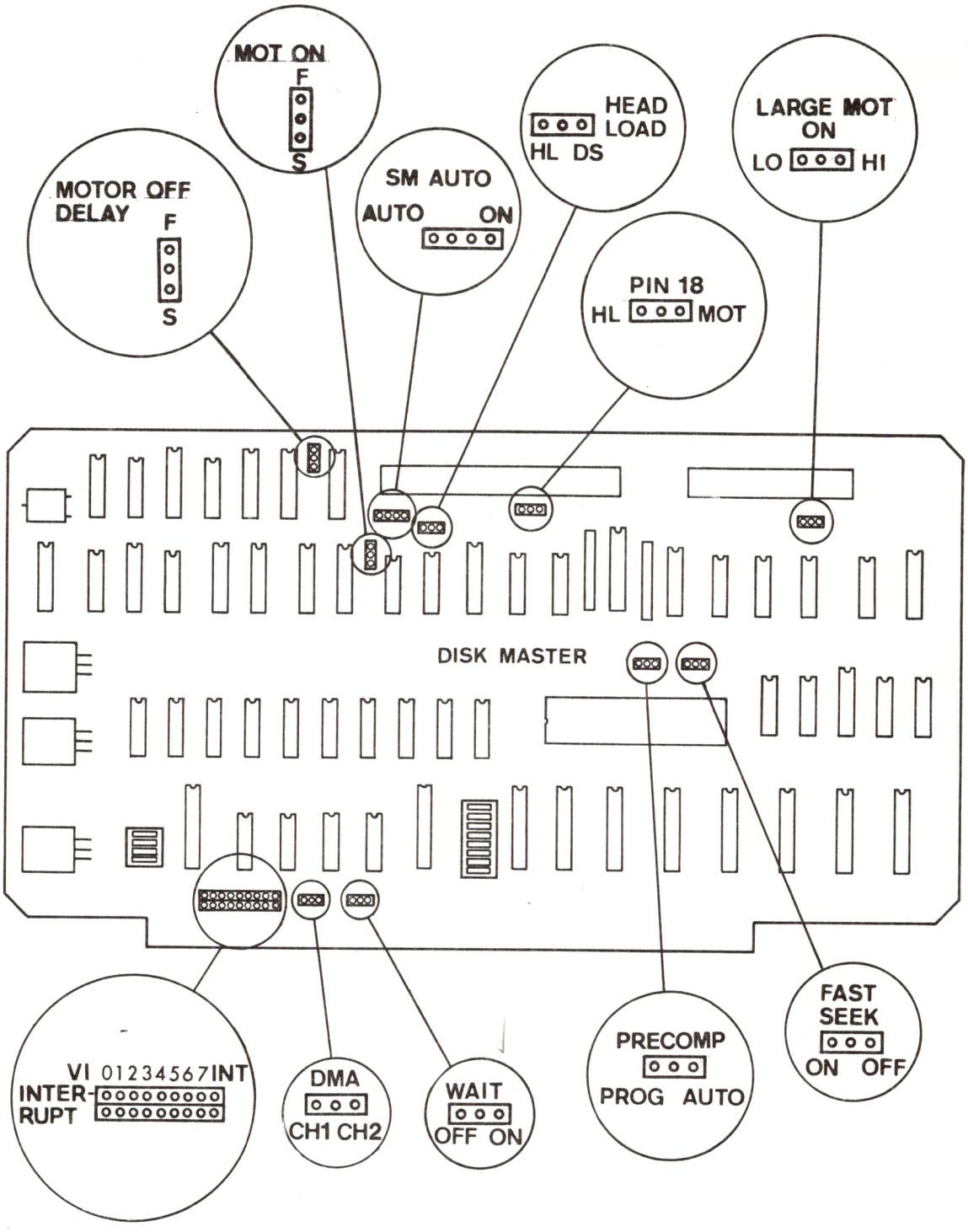

DiskMaster Jumper Locations

BUS INTERFACE SWITCHES AND JUMPERS

PORT ADDRESS Switch

The DiskMaster requires six I/O ports that are grouped consecutively starting on any 8-port boundary called the BASE. The BASE is selected using the top five positions of the PORT ADDRESS switch. These top five positions are labeled A7-A3 and correspond to address lines A7-A3 on the bus. The bottom three positions of the PORT ADDRESS switch are not used.

Switch settings					I/O port address base
A7	A6	A5	A4	A3	
0	0	0	0	0	00 hex
0	0	0	0	1	08 hex
0	0	0	1	0	10 hex
0	0	0	1	1	18 hex
0	0	1	0	0	20 hex
0	0	1	0	1	28 hex
0	0	1	1	0	30 hex
0	0	1	1	1	38 hex
0	1	0	0	0	40 hex
0	1	0	0	1	48 hex
0	1	0	1	0	50 hex
0	1	0	1	1	58 hex
0	1	1	0	0	60 hex
0	1	1	0	1	68 hex
0	1	1	1	0	70 hex
0	1	1	1	1	78 hex
1	0	0	0	0	80 hex
1	0	0	0	1	88 hex
1	0	0	1	0	90 hex
1	0	0	1	1	98 hex
1	0	1	0	0	A0 hex
1	0	1	0	1	A8 hex
1	0	1	1	0	B0 hex
1	0	1	1	1	B8 hex
Currently 1	1	0	0	0	C0 hex
1	1	0	0	1	C8 hex
1	1	0	1	0	D0 hex
1	1	0	1	1	D8 hex
1	1	1	0	0	E0 hex*
1	1	1	0	1	E8 hex
1	1	1	1	0	F0 hex
1	1	1	1	1	F8 hex

*BASE address used by Seattle Computer I/O systems

INTERRUPT Jumper

Currently VI1

Interrupts from the DiskMaster can be sent to any of the eight Vectored Interrupt lines VI0-VI7 or directly to the INT line for systems without interrupt controllers. Place the blue shunt over one of the nine vertical pairs of pins corresponding to interrupt lines VI0-VI7 or INT.

If none of the interrupt lines should be used, put the shunt on any two of the pins in the upper row.

WAIT Jumper

Currently ON

This jumper selects whether or not the DiskMaster asks for wait-states when the CPU talks to the 1793 disk controller chip. The WAIT jumper should be in the ON position for all CPUs faster than a 2-MHz 8080 or Z80. With the WAIT jumper in the ON position, the number of wait states asked for depends on the CPU speed: the faster the CPU's clock, the more wait-states will be requested.

The following instructions are only necessary if you have a DMA controller in your system.

DMA PRIORITY Switch

This switch selects the DMA priority to which the Disk Master will respond. Since the DMA controller is not located on the DiskMaster board, the DiskMaster monitors the S-100 bus to determine when a DMA cycle is being run for it. The DMA priority lines are used to determine when the DiskMaster's DMA controller (one of up to sixteen possible DMA controllers) is active. The DMA PRIORITY switches are labeled DMA 0-3 on the board to the left of the switch and 1 and 0 above the switch.

Switch settings						
DMA 3	DMA 2	DMA 1	DMA 0	Priority (hex)	Priority (decimal)	
0	0	0	0	0	0	Lowest priority
0	0	0	1	1	1	
0	0	1	0	2	2	
0	0	1	1	3	3	
0	1	0	0	4	4	
0	1	0	1	5	5	
0	1	1	0	6	6	
0	1	1	1	7	7	
1	0	0	0	8	8	
1	0	0	1	9	9	
1	0	1	0	A	10	
1	0	1	1	B	11	
1	1	0	0	C	12	
1	1	0	1	D	13	
1	1	1	0	E	14	
1	1	1	1	F	15	Highest priority

DMA Jumper

The DiskMaster sends DMA requests to the Direct Memory Access Controller board using one of the NDEF pins of the S-100 bus. This jumper selects which pin is used.

CH1 Pin 65

CH2 Pin 66

DISK INTERFACE JUMPERS AND HEADERS

AUTO MOT/SM AUTO/ON Jumper

This jumper lets the DiskMaster know which drives have spindle motors that are under its control. This is a four-position jumper. To choose one of the three settings, place the blue shunt over the jumpers pins as shown below.

AUTO MOT

DiskMaster controls motors of both 8-inch and 5.25-inch drives. Place the shunt over the two leftmost jumper pins.

SM AUTO

DiskMaster controls 5.25-inch spindle motors; 8-inch spindle motors are assumed to be always on. Place the shunt over the two center jumper pins.

ON

Spindle motors of both 8-inch and 5.25-inch drives are assumed to be always on. Place the shunt over the two rightmost jumper pins.

LARGE MOT ON Jumper

This jumper controls the polarity of the MOTOR ON signal going to the 8-inch disk drives. Most standard-height 8-inch drives have AC spindle motors that cannot be turned on and off, so the setting of this jumper is irrelevant when using these drives.

Currently **LO** Active-low motor-on (PerSci drives)

HI Active-high motor-on (Tandon drives)

MOT ON Jumper

This jumper selects how long the DiskMaster waits for the spindle motors to come up to speed.

F 1/2 second

CURRENTLY **S** 1 second

MOTOR OFF DELAY Jumper

This jumper selects how long the DiskMaster will keep the spindle motors going after the disk heads have been unloaded.

F	7.5 seconds
Currently **S**	15 seconds

HEAD LOAD Jumper

This jumper selects whether 8-inch drives use the HEAD LOAD signal or the DRIVE SELECT signal to load the heads.

HL	Drives use HEAD LOAD signal
Currently **DS**	Drives use DRIVE SELECT signal

FAST SEEK Jumper

This jumper selects whether the 8-inch drives have standard stepper motor head positioners or voice coil head positioners.

ON	Voice coil positioner
Currently **OFF**	Stepper motor positioner

PRECOMP Jumper

This jumper selects whether write precompensation is turned on and off by the 1793 disk controller chip using the TG43 signal, or whether write precompensation is enabled by a bit in the Auxiliary Command port. If the 1793 controls write precompensation, it will be turned on for all tracks beyond track 43. Write compensation is not used with single-density.

No precompensation is required for a Seattle Computer system with Mitsubishi drives.

Currently **PROG**	Write precompensation controlled by Auxiliary Command port.
AUTO	Write precompensation controlled by 1793's TG43 signal.

PIN 18 Jumper

This jumper selects whether pin 18 of the 50-pin connector for 8-inch drives are used for head load or for spindle motor control. Mitsubishi half-height drives use this line for motor control; most other drives ignore the signal or use it for head load.

Currently **HL** Send HEAD LOAD signal to pin 18

MOT Send MOTOR ON signal to pin 18

8-Inch Drive Configuration Header

This sixteen-pin socket is found in location J3 (between IC17 and IC18). It can be used to re-arrange the signals on the 50-pin connector for the 8-inch drives (this is required for PerSci drives).

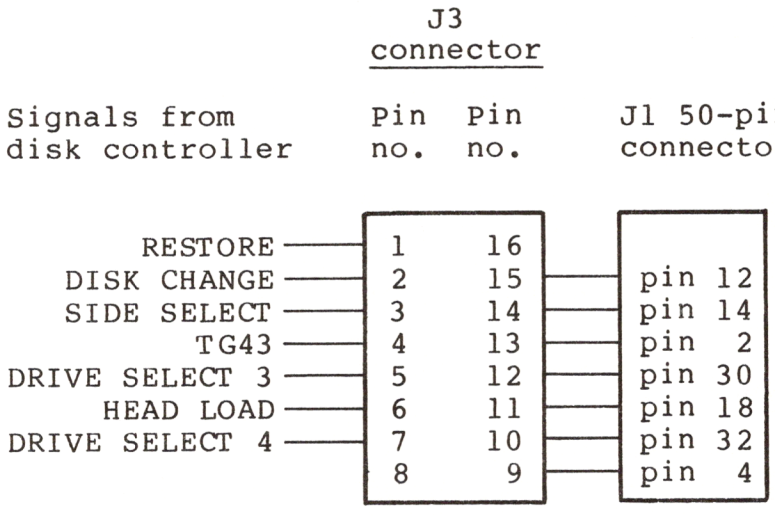

The signals for the standard drive are shown below, along with the signals as rearranged for the PerSci drive.

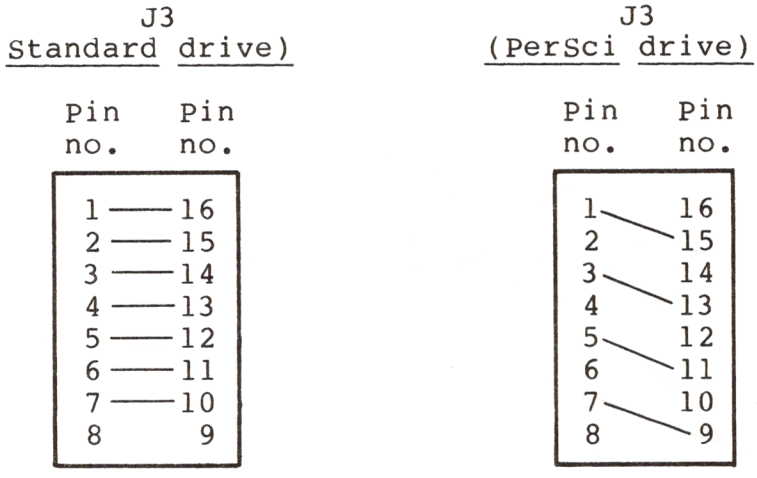

CHAPTER 3. I/O PORTS

The DiskMaster uses a total of six I/O ports for communication with the CPU. These six ports can be set on any eight-port boundary called the BASE. See the description of how to select the BASE under "PORT ADDRESS Switch" in Section 2.

The six I/O ports are used as follows:

BASE+0 - 1793 Command/Status register BASE+1 - 1793 Track register BASE+2 - 1793 Sector register BASE+3 - 1793 Data register	See the Western Digital data sheet in Appendix A
BASE+4 - Auxiliary Command/Status port BASE+5 - Wait Synchronization port	Described below

The 1793 uses the first four ports. For more information, refer to the Western Digital 1793 data sheet in Appendix A.

AUXILIARY COMMAND PORT

The Wait Synchronization I/O port is BASE+4 (see the description of how to select the BASE under "PORT ADDRESS Switch" in Section 2.

The bits of the auxiliary command port are:

Bit 7	Bit 6	Bit 5	Bit 4	Bit 3	Bit 2	Bit 1	Bit 0
DMA write	DMA enable	Pre-comp enable	Small drive	Double density	Side	DS1	DS0

restore

DMA WRITE Bit

Bit 7 controls the DMA direction. The DMA direction refers to the direction of the **memory** access, not the disk access. DMA WRITE should be low when DMA ENABLE is low; otherwise RESTORE will be activated (see "RESTORE" below).

Bit 7 = 0 Read memory (write disk)

= 1 Write memory (read disk)

DMA ENABLE Bit

Bit 6 controls whether DMA requests are passed to the DMA controller and whether the DiskMaster responds to DMA cycles on the bus.

To turn off DMA, be sure to turn off both DMA ENABLE **and** DMA WRITE; otherwise RESTORE will be activated (see "RESTORE Function" below).

Bit 6 = 0	DMA requests are not sent to the DMA controller; DiskMaster ignores DMA cycles on the bus.
= 1	DMA requests are sent to the DMA controller; DiskMaster responds to DMA cycles on the bus.

RESTORE Function

The RESTORE function for PerSci drives is activated by setting setting bits 6 and 7 as follows:

Bit 6 = 0

Bit 7 = 1

If you do not have PerSci drives, all RESTORE does is load the head of the selected drive. This can be a handy way to keep the head loaded to perform head alignment or other disk drive maintenance.

PRECOMP ENABLE Bit

Bit 5 controls whether or not write precompensation is used when writing to double-density disks. It also controls the low WRITE CURRENT CURRENT or TRACK GREATER THAN 43 (TG43) signal to 8-inch drives. If the PRECOMP jumper (see "Disk Interface Jumpers and Headers") is in the AUTO position this bit does nothing: write precompensation and write current are controlled by the TG43 signal from the 1793 disk controller chip.

Bit 5 = 0	Disable precompensation
= 1	Enable precompensation

SMALL DRIVE Bit

Bit 4 selects whether a 5.25-inch drive or an 8-inch drive is being used. When 5.25-inch drives are selected, the 8-inch drive selects are disabled, and vice-versa. It is this feature which allows having four 8-inch drives and four 5.25-inch drives connected to the DiskMaster at the same time.

Bit 4 = 0 8-inch drive

= 1 5.25-inch drive

DOUBLE-DENSITY Bit

Bit 3 selects single- or double-density operation.

Bit 3 = 0 Single-density

= 1 Double-density

SIDE Bit

Bit 2 selects side 0 or 1 of double-sided disks.

Bit 2 = 0 Side 0

= 1 Side 1

DS1 and DS0 BITS

Bit 1 (DS1) and bit 0 (DS0) select one of four drives of 5.25-inch or 8-inch size.

DS1 (bit 1)	DS0 (bit 0)	Drive selected
0	0	1
0	1	2
1	0	3
1	1	4

AUXILIARY STATUS PORT

The bits of the auxiliary status port are described below.

Bit 7	Bit 6	Bit 5	Bit 4	Bit 3	Bit 2	Bit 1	Bit 0
Disk change	Two-sided	Head load	X	X	X	X	Interrupt request

X = Undefined bits with no particular value.

DISK CHANGE Bit

Many Shugart-type 8-inch disk drives provide a Disk Change signal on pin 12 of the 50-pin connector which can be read using this status bit. If the disk has been changed, the Disk Change bit (bit 7) will be low.

TWO-SIDED/SEEK COMPLETE Bit

If your 8-inch drives are standard Shugart-type double-sided drives, there is probably a TWO-SIDED signal on pin 10 of the 50-pin connector which can be read using this status bit. When a double-sided disk is used, this bit (bit 6) will be high.

If your 8-inch drives are PerSci drives, the state of the Seek Complete signal can be read using this bit. This bit will be high when the seek is completed.

HEAD LOAD Bit

Bit 5 will be high when the disk drive head is loaded (including a head-load forced by RESTORE).

INTERRUPT REQUEST Bit

The state of the 1793's interrupt request pin can be read using bit 0. If this bit is high, the disk controller is requesting an interrupt.

WAIT SYNCHRONIZATION PORT

The Wait Synchronization port performs the same function as the Auxiliary Command/Status port. The only exception is that any access of this port holds the CPU in wait states until either Interrupt Request or Data Request from the 1793 disk controller chip become active. This port is usually used to make the CPU wait until the 1793 disk controller is ready to transfer data in non-DMA systems.

The Wait Synchronization I/O port is BASE+5 (see the description of how to select the BASE under "PORT ADDRESS Switch" in Section 2).

WESTERN DIGITAL
CORPORATION

FD179X-02
Floppy Disk Formatter/Controller Family

FEATURES

- TWO VFO CONTROL SIGNALS — RG & VFOE
- SOFT SECTOR FORMAT COMPATIBILITY
- AUTOMATIC TRACK SEEK WITH VERIFICATION
- ACCOMMODATES SINGLE AND DOUBLE DENSITY FORMATS
  - IBM 3740 Single Density (FM)
  - IBM System 34 Double Density (MFM)
  - Non IBM Format for Increased Capacity
- READ MODE
  - Single/Multiple Sector Read with Automatic Search or Entire Track Read
  - Selectable 128, 256, 512 or 1024 Byte Sector Lengths
- WRITE MODE
  - Single/Multiple Sector Write with Automatic Sector Search
  - Entire Track Write for Diskette Formatting
- SYSTEM COMPATIBILITY
  - Double Buffering of Data 8 Bit Bi-Directional Bus for Data, Control and Status
  - DMA or Programmed Data Transfers
  - All Inputs and Outputs are TTL Compatible
  - On-Chip Track and Sector Registers/Comprehensive Status Information
- PROGRAMMABLE CONTROLS
  - Selectable Track to Track Stepping Time
  - Side Select Compare
- INTERFACES TO WD1691 DATA SEPARATOR
- WINDOW EXTENSION
- INCORPORATES ENCODING/DECODING AND ADDRESS MARK CIRCUITRY
- FD1792/4 IS SINGLE DENSITY ONLY
- FD1795/7 HAS A SIDE SELECT OUTPUT

179X-02 FAMILY CHARACTERISTICS

FEATURES	1791	1792	1793	1794	1795	1797
Single Density (FM)	X	X	X	X	X	X
Double Density (MFM)	X		X		X	X
True Data Bus			X	X		X
Inverted Data Bus	X	X			X	
Write Precomp	X	X	X	X	X	X
Side Selection Output					X	X

APPLICATIONS

8" FLOPPY AND 5¼" MINI FLOPPY CONTROLLER
SINGLE OR DOUBLE DENSITY
CONTROLLER/FORMATTER

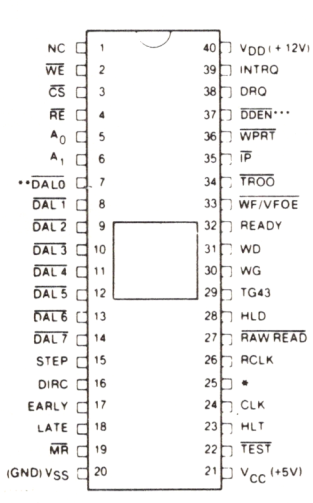

*1791/3 = RG 1795/7 = SSO
**1793/7 TRUE BUS
***1792/4 OPEN

PIN CONNECTIONS

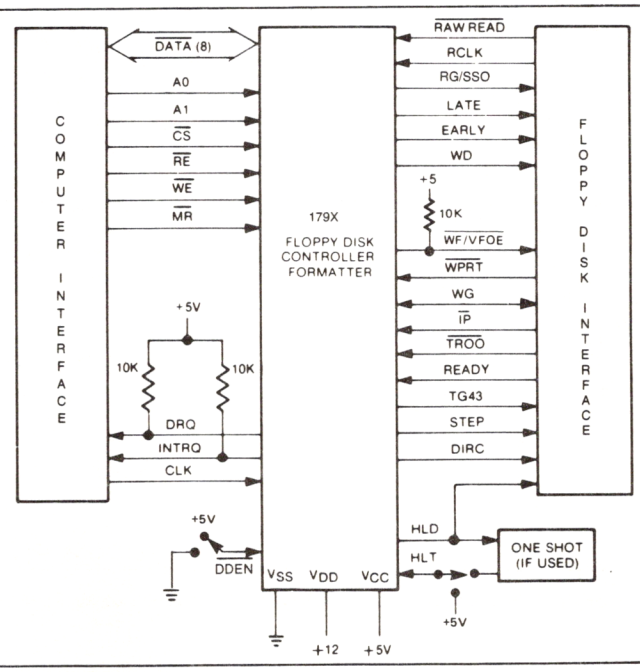

FD179X SYSTEM BLOCK DIAGRAM

PIN OUTS

PIN NUMBER	PIN NAME	SYMBOL	FUNCTION
1	NO CONNECTION	NC	Pin 1 is internally connected to a back bias generator and must be left open by the user.
19	MASTER RESET	$\overline{MR}$	A logic low (50 microseconds min.) on this input resets the device and loads HEX 03 into the command register. The Not Ready (Status Bit 7) is reset during $\overline{MR}$ ACTIVE. When $\overline{MR}$ is brought to a logic high a RESTORE Command is executed, regardless of the state of the Ready signal from the drive. Also, HEX 01 is loaded into sector register.
20	POWER SUPPLIES	V_{SS}	Ground
21		V_{CC}	+5V ±5%
40		V_{DD}	+12V ±5%
COMPUTER INTERFACE:			
2	WRITE ENABLE	$\overline{WE}$	A logic low on this input gates data on the DAL into the selected register when $\overline{CS}$ is low.
3	CHIP SELECT	$\overline{CS}$	A logic low on this input selects the chip and enables computer communication with the device.
4	READ ENABLE	$\overline{RE}$	A logic low on this input controls the placement of data from a selected register on the DAL when $\overline{CS}$ is low.
5,6	REGISTER SELECT LINES	A0, A1	These inputs select the register to receive/transfer data on the DAL lines under $\overline{RE}$ and $\overline{WE}$ control: $\overline{CS}$ A1 A0 $\overline{RE}$ $\overline{WE}$ 0 0 0 Status Reg Command Reg 0 0 1 Track Reg Track Reg 0 1 0 Sector Reg Sector Reg 0 1 1 Data Reg Data Reg
7-14	DATA ACCESS LINES	DAL0-DAL7	Eight bit Bidirectional bus used for transfer of data, control, and status. This bus is receiver enabled by $\overline{WE}$ or transmitter enabled by $\overline{RE}$. Each line will drive 1 standard TTL load.
24	CLOCK	CLK	This input requires a free-running 50% duty cycle square wave clock for internal timing reference, 2 MHz ± 1% for 8" drives, 1 MHz ± 1% for mini-floppies.
38	DATA REQUEST	DRQ	This open drain output indicates that the DR contains assembled data in Read operations, or the DR is empty in Write operations. This signal is reset when serviced by the computer through reading or loading the DR in Read or Write operations, respectively. Use 10K pull-up resistor to +5.
39	INTERRUPT REQUEST	INTRQ	This open drain output is set at the completion of any command and is reset when the STATUS register is read or the command register is written to. Use 10K pull-up resistor to +5.
FLOPPY DISK INTERFACE:			
15	STEP	STEP	The step output contains a pulse for each step.
16	DIRECTION	DIRC	Direction Output is active high when stepping in, active low when stepping out.
17	EARLY	EARLY	Indicates that the WRITE DATA pulse occuring while Early is active (high) should be shifted early for write precompensation.
18	LATE	LATE	Indicates that the write data pulse occurring while Late is active (high) should be shifted late for write precompensation.

PIN NUMBER	PIN NAME	SYMBOL	FUNCTION
22	$\overline{\text{TEST}}$	$\overline{\text{TEST}}$	This input is used for testing purposes only and should be tied to +5V or left open by the user unless interfacing to voice coil actuated steppers.
23	HEAD LOAD TIMING	HLT	When a logic high is found on the HLT input the head is assumed to be engaged. It is typically derived from a 1 shot triggered by HLD.
25	READ GATE (1791, 1792, 1793, 1794)	RG	This output is used for synchronization of external data separators. The output goes high after two Bytes of zeros in single density, or 4 Bytes of either zeros or ones in double density operation.
25	SIDE SELECT OUTPUT (1795, 1797)	SSO	The logic level of the Side Select Output is directly controlled by the 'S' flag in Type II or III commands. When U = 1, SSO is set to a logic 1. When U = 0, SSO is set to a logic 0. The SSO is compared with the side information in the Sector I.D. Field. If they do not compare Status Bit 4 (RNF) is set. The Side Select Output is only updated at the beginning of a Type II or III command. It is forced to a logic 0 upon a MASTER RESET condition.
26	READ CLOCK	RCLK	A nominal square-wave clock signal derived from the data stream must be provided to this input. Phasing (i.e. RCLK transitions) relative to RAW READ is important but polarity (RCLK high or low) is not.
27	$\overline{\text{RAW READ}}$	$\overline{\text{RAW READ}}$	The data input signal directly from the drive. This input shall be a negative pulse for each recorded flux transition.
28	HEAD LOAD	HLD	The HLD output controls the loading of the Read-Write head against the media.
29	TRACK GREATER THAN 43	TG43	This output informs the drive that the Read/Write head is positioned between tracks 44-76. This output is valid only during Read and Write Commands.
30	WRITE GATE	WG	This output is made valid before writing is to be performed on the diskette.
31	WRITE DATA	WD	A 200 ns (MFM) or 500 ns (FM) output pulse per flux transition. WD contains the unique Address marks as well as data and clock in both FM and MFM formats.
32	READY	READY	This input indicates disk readiness and is sampled for a logic high before Read or Write commands are performed. If Ready is low the Read or Write operation is not performed and an interrupt is generated. Type I operations are performed regardless of the state of Ready. The Ready input appears in inverted format as Status Register bit 7.
33	$\overline{\text{WRITE FAULT}}$ $\overline{\text{VFO ENABLE}}$	$\overline{\text{WF/VFOE}}$	This is a bi-directional signal used to signify writing faults at the drive, and to enable the external PLO data separator. When WG = 1, Pin 33 functions as a WF input. If WF = 0, any write command will immediately be terminated. When WG = 0, Pin 33 functions as a VFOE output. VFOE will go low during a read operation after the head has loaded and settled (HLT = 1). On the 1795/7, it will remain low until the last bit of the second CRC byte in the ID field. VFOE will then go high until 8 bytes (MFM) or 4 bytes (FM) before the Address Mark. It will then go active until the last bit of the second CRC byte of the Data Field. On the 1791/3, VFOE will remain low until the end of the Data Field. This pin has an internal 100K Ohm pull-up resistor.
34	$\overline{\text{TRACK 00}}$	$\overline{\text{TR00}}$	This input informs the FD179X that the Read/Write head is positioned over Track 00.

PIN NUMBER	PIN NAME	SYMBOL	FUNCTION
35	INDEX PULSE	$\overline{IP}$	This input informs the FD179X when the index hole is encountered on the diskette.
36	WRITE PROTECT	$\overline{WPRT}$	This input is sampled whenever a Write Command is received. A logic low terminates the command and sets the Write Protect Status bit.
37	DOUBLE DENSITY	$\overline{DDEN}$	This input pin selects either single or double density operation. When $\overline{DDEN}$ = 0, double density is selected. When $\overline{DDEN}$ = 1, single density is selected. This line must be left open on the 1792/4.

GENERAL DESCRIPTION

The FD179X are N-Channel Silicon Gate MOS LSI devices which perform the functions of a Floppy Disk Formatter/Controller in a single chip implementation. The FD179X, which can be considered the end result of both the FD1771 and FD1781 designs, is IBM 3740 compatible in single density mode (FM) and System 34 compatible in Double Density Mode (MFM). The FD179X contains all the features of its predecessor the FD1771, plus the added features necessary to read/write and format a double density diskette. These include address mark detection, FM and MFM encode and decode logic, window extension, and write precompensation. In order to maintain compatibility, the FD1771, FD1781, and FD179X designs were made as close as possible with the computer interface, instruction set, and I/O registers being identical. Also, head load control is identical. In each case, the actual pin assignments vary by only a few pins from any one to another.

The processor interface consists of an 8-bit bi-directional bus for data, status, and control word transfers. The FD179X is set up to operate on a multiplexed bus with other bus-oriented devices.

The FD179X is TTL compatible on all inputs and outputs. The outputs will drive ONE TTL load or three LS loads. The 1793 is identical to the 1791 except the DAL lines are TRUE for systems that utilize true data busses.

The 1795/7 has a side select output for controlling double sided drives, and the 1792 and 1794 are "Single Density Only" versions of the 1791 and 1793 respectively. On these devices, DDEN must be left open.

ORGANIZATION

The Floppy Disk Formatter block diagram is illustrated on page 5. The primary sections include the parallel processor interface and the Floppy Disk interface.

Data Shift Register — This 8-bit register assembles serial data from the Read Data input ($\overline{RAW\ READ}$) during Read operations and transfers serial data to the Write Data output during Write operations.

Data Register — This 8-bit register is used as a holding register during Disk Read and Write operations. In Disk Read operations the assembled data byte is transferred in parallel to the Data Register from the Data Shift Register. In Disk Write operations information is transferred in parallel from the Data Register to the Data Shift Register.

When executing the Seek command the Data Register holds the address of the desired Track position. This register is loaded from the DAL and gated onto the DAL under processor control.

Track Register — This 8-bit register holds the track number of the current Read/Write head position. It is incremented by one every time the head is stepped in (towards track 76) and decremented by one when the head is stepped out (towards track 00). The contents of the register are compared with the recorded track number in the ID field during disk Read, Write, and Verify operations. The Track Register can be loaded from or transferred to the DAL. This Register should not be loaded when the device is busy.

Sector Register (SR) — This 8-bit register holds the address of the desired sector position. The contents of the register are compared with the recorded sector number in the ID field during disk Read or Write operations. The Sector Register contents can be loaded from or transferred to the DAL. This register should not be loaded when the device is busy.

Command Register (CR) — This 8-bit register holds the command presently being executed. This register should not be loaded when the device is busy unless the new command is a force interrupt. The command register can be loaded from the DAL, but not read onto the DAL.

Status Register (STR) — This 8-bit register holds device Status information. The meaning of the Status bits is a function of the type of command previously executed. This register can be read onto the DAL, but not loaded from the DAL.

CRC Logic — This logic is used to check or to generate the 16-bit Cyclic Redundancy Check (CRC). The polynomial is: $G(x) = x^{16} + x^{12} + x^5 + 1$.

The CRC includes all information starting with the address mark and up to the CRC characters. The CRC register is preset to ones prior to data being shifted through the circuit.

Arithmetic/Logic Unit (ALU) — The ALU is a serial comparator, incrementer, and decrementer and is used for register modification and comparisons with the disk recorded ID field.

Timing and Control — All computer and Floppy Disk Interface controls are generated through this logic. The internal device timing is generated from an external crystal clock.

The FD179X has two different modes of operation according to the state of $\overline{DDEN}$. When $\overline{DDEN}$ = 0 double density (MFM) is assumed. When $\overline{DDEN}$ = 1, single

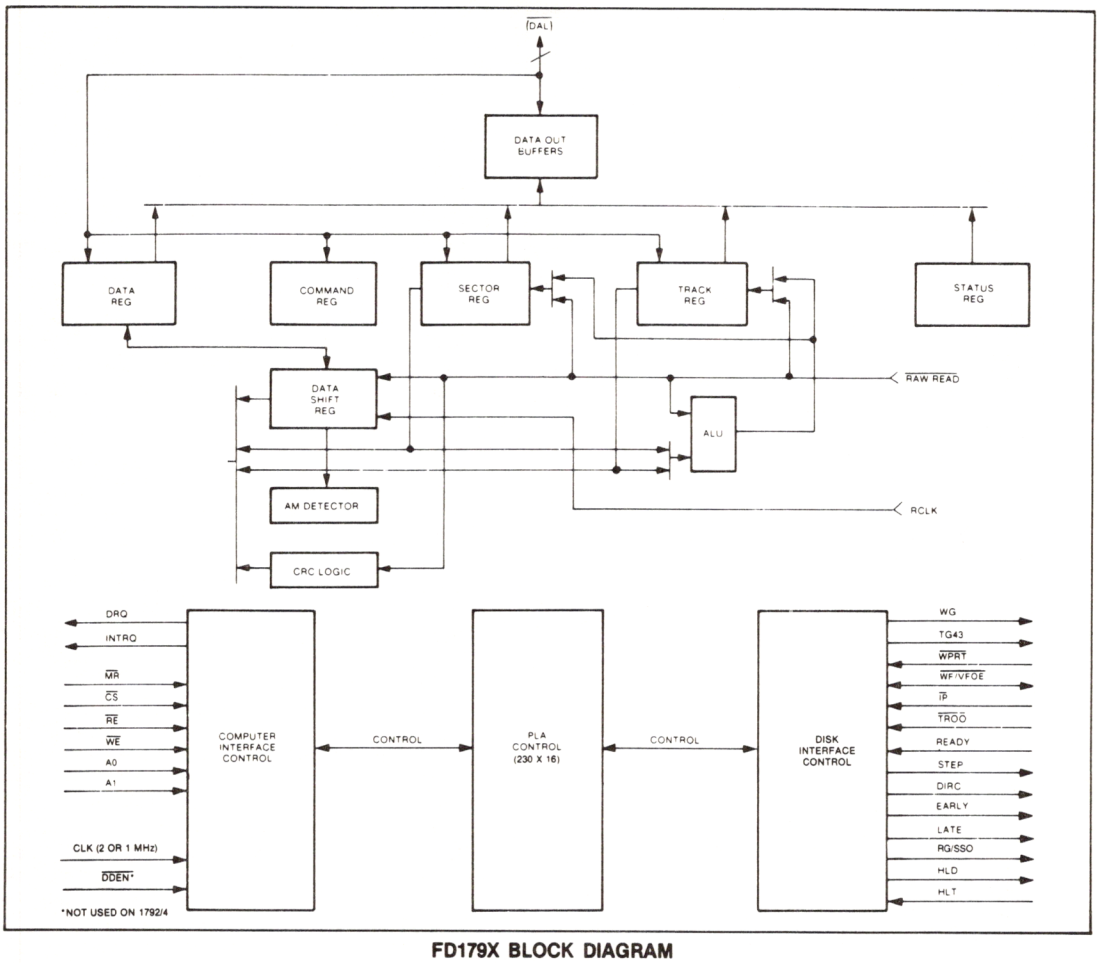

FD179X BLOCK DIAGRAM

density (FM) is assumed. 1792 & 1794 are single density only.

AM Detector — The address mark detector detects ID, data and index address marks during read and write operations.

PROCESSOR INTERFACE

The interface to the processor is accomplished through the eight Data Access Lines ($\overline{DAL}$) and associated control signals. The $\overline{DAL}$ are used to transfer Data, Status, and Control words out of, or into the FD179X. The $\overline{DAL}$ are three state buffers that are enabled as output drivers when Chip Select ($\overline{CS}$) and Read Enable ($\overline{RE}$) are active (low logic state) or act as input receivers when $\overline{CS}$ and Write Enable ($\overline{WE}$) are active.

When transfer of data with the Floppy Disk Controller is required by the host processor, the device address is decoded and $\overline{CS}$ is made low. The address bits A1 and A0, combined with the signals $\overline{RE}$ during a Read operation or $\overline{WE}$ during a Write operation are interpreted as selecting the following registers:

A1	A0	READ ($\overline{RE}$)	WRITE ($\overline{WE}$)
0	0	Status Register	Command Register
0	1	Track Register	Track Register
1	0	Sector Register	Sector Register
1	1	Data Register	Data Register

During Direct Memory Access (DMA) types of data transfers between the Data Register of the FD179X and the processor, the Data Request (DRQ) output is used in Data Transfer control. This signal also appears as status bit 1 during Read and Write operations.

On Disk Read operations the Data Request is activated (set high) when an assembled serial input byte is transferred in parallel to the Data Register. This bit is cleared when the Data Register is read by the processor. If the Data Register is read after one or more characters are lost, by having new data transferred into the register prior to processor readout, the Lost Data bit is set in the Status Register. The Read operation continues until the end of sector is reached.

On Disk Write operations the data Request is activated when the Data Register transfers its contents to the Data

Shift Register, and requires a new data byte. It is reset when the Data Register is loaded with new data by the processor. If new data is not loaded at the time the next serial byte is required by the Floppy Disk, a byte of zeroes is written on the diskette and the Lost Data bit is set in the Status Register.

At the completion of every command an INTRQ is generated. INTRQ is reset by either reading the status register or by loading the command register with a new command. In addition, INTRQ is generated if a Force Interrupt command condition is met.

The 179X has two modes of operation according to the state of $\overline{DDEN}$ (Pin 37). When $\overline{DDEN}$ = 1, single density is selected. In either case, the CLK input (Pin 24) is at 2 MHz. However, when interfacing with the mini-floppy, the CLK input is set at 1 MHz for both single density and double density.

GENERAL DISK READ OPERATIONS

Sector lengths of 128, 256, 512 or 1024 are obtainable in either FM or MFM formats. For FM, $\overline{DDEN}$ should be placed to logical "1." For MFM formats, $\overline{DDEN}$ should be placed to a logical "0." Sector lengths are determined at format time by the fourth byte in the "ID" field.

Sector Length Table*	
Sector Length Field (hex)	Number of Bytes in Sector (decimal)
00	128
01	256
02	512
03	1024

*1795/97 may vary — see command summary.

The number of sectors per track as far as the FD179X is concerned can be from 1 to 255 sectors. The number of tracks as far as the FD179X is concerned is from 0 to 255 tracks. For IBM 3740 compatibility, sector lengths are 128 bytes with 26 sectors per track. For System 34 compatibility (MFM), sector lengths are 256 bytes/sector with 26 sectors/track; or lengths of 1024 bytes/sector with 8 sectors/track. (See Sector Length Table)

For read operations in 8" double density the FD179X requires $\overline{RAW\ READ}$ Data (Pin 27) signal which is a 200 ns pulse per flux transition and a Read clock (RCLK) signal to indicate flux transition spacings. The RCLK (Pin 26) signal is provided by some drives but if not it may be derived externally by Phase lock loops, one shots, or counter techniques. In addition, a Read Gate Signal is provided as an output (Pin 25) on 1791/92/93/94 which can be used to inform phase lock loops when to acquire synchronization. When reading from the media in FM. RG is made true when 2 bytes of zeroes are detected. The FD179X must find an address mark within the next 10 bytes; otherwise RG is reset and the search for 2 bytes of zeroes begins all over again. If an address mark is found within 10 bytes, RG remains true as long as the FD179X is deriving any useful information from the data stream. Similarly for MFM, RG is made active when 4 bytes of "00" or "FF" are detected. The FD179X must find an address mark within the next 16 bytes, otherwise RG is reset and search resumes.

During read operations (WG = 0), the $\overline{VFOE}$ (Pin 33) is provided for phase lock loop synchronization. $\overline{VFOE}$ will go active low when:

a) Both HLT and HLD are True
b) Settling Time, if programmed, has expired
c) The 179X is inspecting data off the disk

If $\overline{WF}/\overline{VFOE}$ is not used, leave open or tie to a 10K resistor to +5.

GENERAL DISK WRITE OPERATION

When writing is to take place on the diskette the Write Gate (WG) output is activated, allowing current to flow into the Read/Write head. As a precaution to erroneous writing the first data byte must be loaded into the Data Register in response to a Data Request from the FD179X before the Write Gate signal can be activated.

Writing is inhibited when the $\overline{Write\ Protect}$ input is a logic low, in which case any Write command is immediately terminated, an interrupt is generated and the Write Protect status bit is set. The Write Fault input, when activated, signifies a writing fault condition detected in disk drive electronics such as failure to detect write current flow when the Write Gate is activated. On detection of this fault the FD179X terminates the current command, and sets the $\overline{Write\ Fault}$ bit (bit 5) in the Status Word. The $\overline{Write\ Fault}$ input should be made inactive when the Write Gate output becomes inactive.

For write operations, the FD179X provides Write Gate (Pin 30) and Write Data (Pin 31) outputs. Write data consists of a series of 500 ns pulses in FM ($\overline{DDEN}$ = 1) and 200 ns pulses in MFM ($\overline{DDEN}$ = 0). Write Data provides the unique address marks in both formats.

Also during write, two additional signals are provided for write precompensation. These are EARLY (Pin 17) and LATE (Pin 18). EARLY is active true when the WD pulse appearing on (Pin 30) is to be written EARLY. LATE is active true when the WD pulse is to be written LATE. If both EARLY and LATE are low when the WD pulse is present, the WD pulse is to be written at nominal. Since write precompensation values vary from disk manufacturer to disk manufacturer, the actual value is determined by several one shots or delay lines which are located external to the FD179X. The write precompensation signals EARLY and LATE are valid for the duration of WD in both FM and MFM formats.

READY

Whenever a Read or Write command (Type II or III) is received the FD179X samples the Ready input. If this input is logic low the command is not executed and an interrupt is generated. All Type I commands are performed regardless of the state of the Ready input. Also, whenever a Type II or III command is received, the TG43 signal output is updated.

COMMAND DESCRIPTION

The FD179X will accept eleven commands. Command words should only be loaded in the Command Register when the Busy status bit is off (Status bit 0). The one exception is the Force Interrupt command. Whenever a command is being executed, the Busy status bit is set. When a command is completed, an interrupt is generated and the Busy status bit is reset. The Status Register indicates whether the completed command encountered an error or was fault free. For ease of discussion, commands are divided into four types. Commands and types are summarized in Table 1.

TABLE 1. COMMAND SUMMARY

A. Commands for Models: 1791, 1792, 1793, 1794

Type	Command	Bits 7	6	5	4	3	2	1	0
I	Restore	0	0	0	0	h	V	r_1	r_0
I	Seek	0	0	0	1	h	V	r_1	r_0
I	Step	0	0	1	T	h	V	r_1	r_0
I	Step-in	0	1	0	T	h	V	r_1	r_0
I	Step-out	0	1	1	T	h	V	r_1	r_0
II	Read Sector	1	0	0	m	S	E	C	0
II	Write Sector	1	0	1	m	S	E	C	a_0
III	Read Address	1	1	0	0	0	E	0	0
III	Read Track	1	1	1	0	0	E	0	0
III	Write Track	1	1	1	1	0	E	0	0
IV	Force Interrupt	1	1	0	1	I_3	I_2	I_1	I_0

B. Commands for Models: 1795, 1797

Bits 7	6	5	4	3	2	1	0
0	0	0	0	h	V	r_1	r_0
0	0	0	1	h	V	r_1	r_0
0	0	1	T	h	V	r_1	r_0
0	1	0	T	h	V	r_1	r_0
0	1	1	T	h	V	r_1	r_0
1	0	0	m	L	E	U	0
1	0	1	m	L	E	U	a_0
1	1	0	0	0	E	U	0
1	1	1	0	0	E	U	0
1	1	1	1	0	E	U	0
1	1	0	1	I_3	I_2	I_1	I_0

TABLE 2. FLAG SUMMARY

FLAG SUMMARY

Command Type	Bit No(s)		Description
I	0, 1	r_1 r_0 = Stepping Motor Rate See Table 3 for Rate Summary	
I	2	V = Track Number Verify Flag	V = 0, No verify V = 1, Verify on destination track
I	3	h = Head Load Flag	h = 1, Load head at beginning h = 0, Unload head at beginning
I	4	T = Track Update Flag	T = 0, No update T = 1, Update track register
II	0	a_0 = Data Address Mark	a_0 = 0, FB (DAM) a_0 = 1, F8 (deleted DAM)
II	1	C = Side Compare Flag	C = 0, Disable side compare C = 1, Enable side compare
II & III	1	U = Update SSO	U = 0, Update SSO to 0 U = 1, Update SSO to 1
II & III	2	E = 15 MS Delay	E = 0, No 15 MS delay E = 1, 15 MS delay
II	3	S = Side Compare Flag	S = 0, Compare for side 0 S = 1, Compare for side 1
II	3	L = Sector Length Flag	LSB's Sector Length in ID Field: 00 / 01 / 10 / 11 L = 0: 256 / 512 / 1024 / 128 L = 1: 128 / 256 / 512 / 1024
II	4	m = Multiple Record Flag	m = 0, Single record m = 1, Multiple records
IV	0-3	I_x = Interrupt Condition Flags I_0 = 1 Not Ready To Ready Transition I_1 = 1 Ready To Not Ready Transition I_2 = 1 Index Pulse I_3 = 1 Immediate Interrupt, Requires A Reset I_3-I_0 = 0 Terminate With No Interrupt (INTRQ)	

*NOTE: See Type IV Command Description for further information.

TYPE I COMMANDS

The Type I Commands include the Restore, Seek, Step, Step-In, and Step-Out commands. Each of the Type I Commands contains a rate field (r0 r1), which determines the stepping motor rate as defined in Table 3.

A 2 μs (MFM) or 4 μs (FM) pulse is provided as an output to the drive. For every step pulse issued, the drive moves one track location in a direction determined by the direction output. The chip will step the drive in the same direction it last stepped unless the command changes the direction.

The Direction signal is active high when stepping in and low when stepping out. The Direction signal is valid 12 μs before the first stepping pulse is generated.

The rates (shown in Table 3) can be applied to a Step-Direction Motor through the device interface.

TABLE 3. STEPPING RATES

CLK	2 MHz	2 MHz	1 MHz	1 MHz	2 MHz	1 MHz
$\overline{DDEN}$	0	1	0	1	x	x
R1 R0	$\overline{TEST}$=1	$\overline{TEST}$=1	$\overline{TEST}$=1	$\overline{TEST}$=1	$\overline{TEST}$=0	$\overline{TEST}$=0
0 0	3 ms	3 ms	6 ms	6 ms	184μs	368μs
0 1	6 ms	6 ms	12 ms	12 ms	190μs	380μs
1 0	10 ms	10 ms	20 ms	20 ms	198μs	396μs
1 1	15 ms	15 ms	30 ms	30 ms	208μs	416μs

After the last directional step an additional 15 milliseconds of head settling time takes place if the Verify flag is set in Type I commands. Note that this time doubles to 30 ms for a 1 MHz clock. If $\overline{TEST}$ = 0, there is zero settling time. There is also a 15 ms head settling time if the E flag is set in any Type II or III command.

When a Seek, Step or Restore command is executed an optional verification of Read-Write head position can be performed by settling bit 2 (V = 1) in the command word to a logic 1. The verification operation begins at the end of the 15 millisecond settling time after the head is loaded against the media. The track number from the first encountered ID Field is compared against the contents of the Track Register. If the track numbers compare and the ID Field Cyclic Redundancy Check (CRC) is correct, the verify operation is complete and an INTRQ is generated with no errors. If there is a match but not a valid CRC, the CRC error status bit is set (Status bit 3), and the next encountered ID field is read from the disk for the verification operation.

The FD179X must find an ID field with correct track number and correct CRC within 5 revolutions of the media; otherwise the seek error is set and an INTRQ is generated. If V = 0, no verification is performed.

The Head Load (HLD) output controls the movement of the read/write head against the media. HLD is activated at the beginning of a Type I command if the h flag is set (h = 1), at the end of the Type I command if the verify flag (V = 1), or upon receipt of any Type II or III command. Once HLD is active it remains active until either a Type I command is received with (h = 0 and V = 0); or if the FD179X is in an idle state (non-busy) and 15 index pulses have occurred.

Head Load timing (HLT) is an input to the FD179X which is used for the head engage time. When HLT = 1, the FD179X assumes the head is completely engaged. The head engage time is typically 30 to 100 ms depending on drive. The low to high transition on HLD is typically used to fire a one shot. The output of the one shot is then used for HLT and supplied as an input to the FD179X.

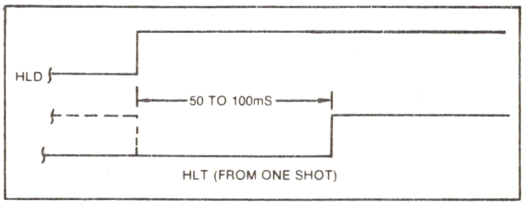

HEAD LOAD TIMING

When both HLD and HLT are true, the FD179X will then read from or write to the media. The "and" of HLD and HLT appears as status Bit 5 in Type I status.

In summary for the Type I commands: if h = 0 and V = 0, HLD is reset. If h = 1 and V = 0, HLD is set at the beginning of the command and HLT is not sampled nor is there an internal 15 ms delay. If h = 0 and V = 1, HLD is set near the end of the command, an internal 15 ms occurs, and the FD179X waits for HLT to be true. If h = 1 and V = 1, HLD is set at the beginning of the command. Near the end of the command, after all the steps have been issued, an internal 15 ms delay occurs and the FD179X then waits for HLT to occur.

For Type II and III commands with E flag off, HLD is made active and HLT is sampled until true. With E flag on, HLD is made active, an internal 15 ms delay occurs and then HLT is sampled until true.

RESTORE (SEEK TRACK 0)

Upon receipt of this command the Track 00 ($\overline{TR00}$) input is sampled. If $\overline{TR00}$ is active low indicating the Read-Write head is positioned over track 0, the Track Register is loaded with zeroes and an interrupt is generated. If $\overline{TR00}$ is not active low, stepping pulses (pins 15 to 16) at a rate specified by the r1 r0 field are issued until the $\overline{TR00}$ input is activated. At this time the Track Register is loaded with zeroes and an interrupt is generated. If the $\overline{TR00}$ input does not go active low after 255 stepping pulses, the FD179X terminates operation, interrupts, and sets the Seek error status bit, providing the V flag is set. A verification operation also takes place if the V flag is set. The h bit allows the head to be loaded at the start of command. Note that the Restore command is executed when $\overline{MR}$ goes from an active to an inactive state and that the DRQ pin stays low.

SEEK

This command assumes that the Track Register contains the track number of the current position of the Read-Write head and the Data Register contains the desired track number. The FD179X will update the Track register and issue stepping pulses in the appropriate direction until the contents of the Track register are equal to the contents of

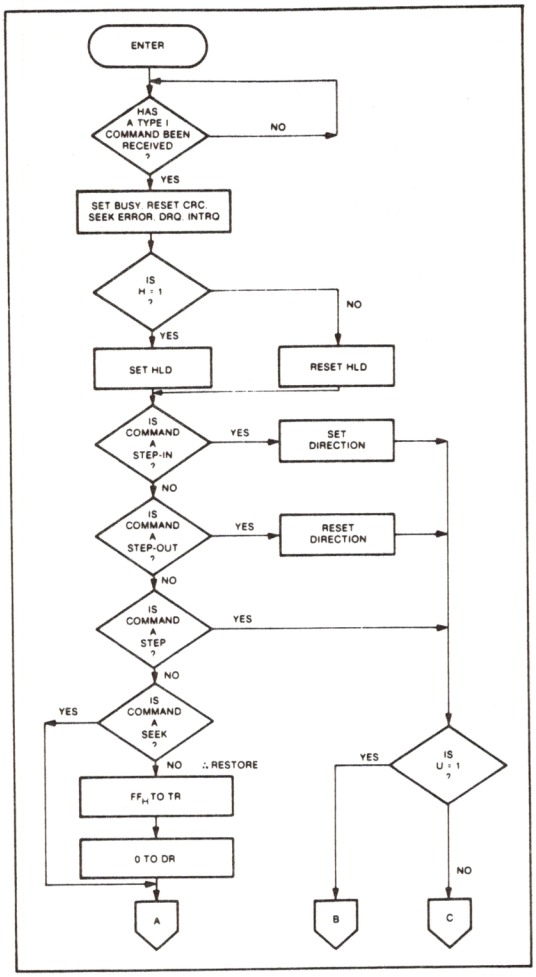

TYPE I COMMAND FLOW

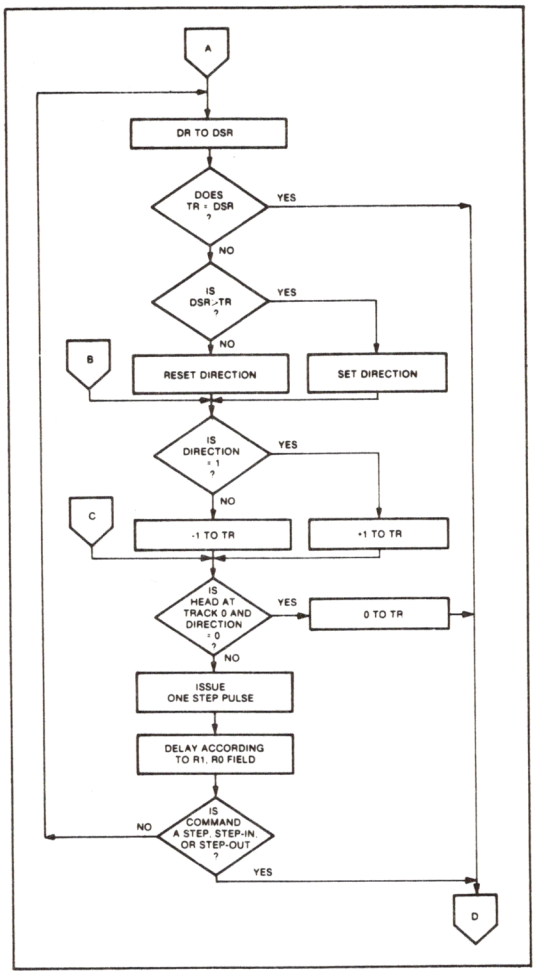

TYPE I COMMAND FLOW

the Data Register (the desired track location). A verification operation takes place if the V flag is on. The h bit allows the head to be loaded at the start of the command. An interrupt is generated at the completion of the command. Note: When using multiple drives, the track register must be updated for the drive selected before seeks are issued.

STEP

Upon receipt of this command, the FD179X issues one stepping pulse to the disk drive. The stepping motor direction is the same as in the previous step command. After a delay determined by the r1r0 field, a verification takes place if the V flag is on. If the U flag is on, the Track Register is updated. The h bit allows the head to be loaded at the start of the command. An interrupt is generated at the completion of the command.

STEP-IN

Upon receipt of this command, the FD179X issues one stepping pulse in the direction towards track 76. If the U flag is on, the Track Register is incremented by one. After a delay determined by the r1r0 field, a verification takes place if the V flag is on. The h bit allows the head to be loaded at the start of the command. An interrupt is generated at the completion of the command.

STEP-OUT

Upon receipt of this command, the FD179X issues one stepping pulse in the direction towards track 0. If the U flag is on, the Track Register is decremented by one. After a delay determined by the r1r0 field, a verification takes place if the V flag is on. The h bit allows the head to be loaded at the start of the command. An interrupt is generated at the completion of the command.

EXCEPTIONS

On the 1795/7 devices, the SSO output is not affected during Type 1 commands, and an internal side compare does not take place when the (V) Verify Flag is on.

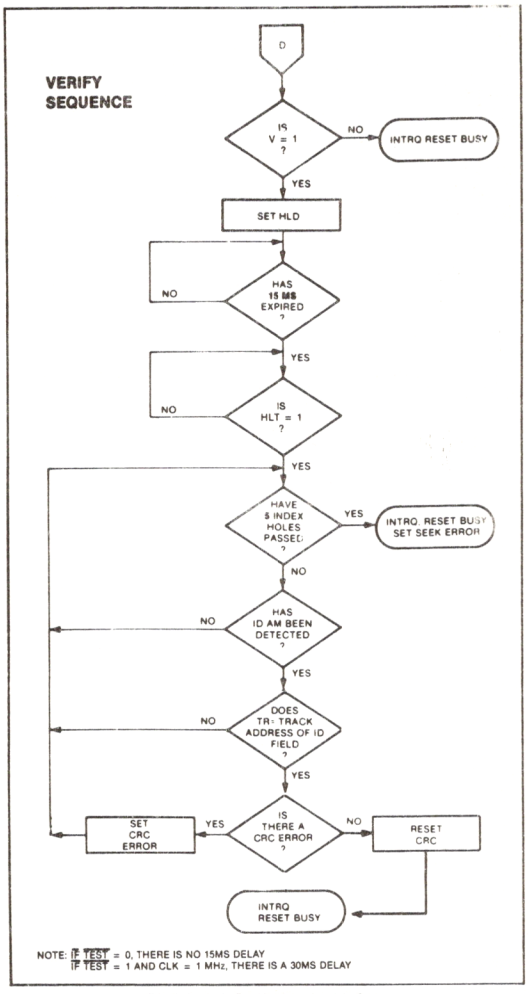

TYPE I COMMAND FLOW

TYPE II COMMANDS

The Type II Commands are the Read Sector and Write Sector commands. Prior to loading the Type II Command into the Command Register, the computer must load the Sector Register with the desired sector number. Upon receipt of the Type II command, the busy status Bit is set. If the E flag = 1 (this is the normal case) HLD is made active and HLT is sampled after a 15 msec delay. If the E flag is 0, the head is loaded and HLT sampled with no 15 msec delay. The ID field and Data Field format are shown on page 13.

When an ID field is located on the disk, the FD179X compares the Track Number on the ID field with the Track Register. If there is not a match, the next encountered ID field is read and a comparison is again made. If there was a match, the Sector Number of the ID field is compared with the Sector Register. If there is not a Sector match, the next encountered ID field is read off the disk and comparisons again made. If the ID field CRC is correct, the data field is then located and will be either written into, or read from depending upon the command. The FD179X must find an ID field with a Track number, Sector number, side number, and CRC within four revolutions of the disk; otherwise, the Record not found status bit is set (Status bit 3) and the command is terminated with an interrupt.

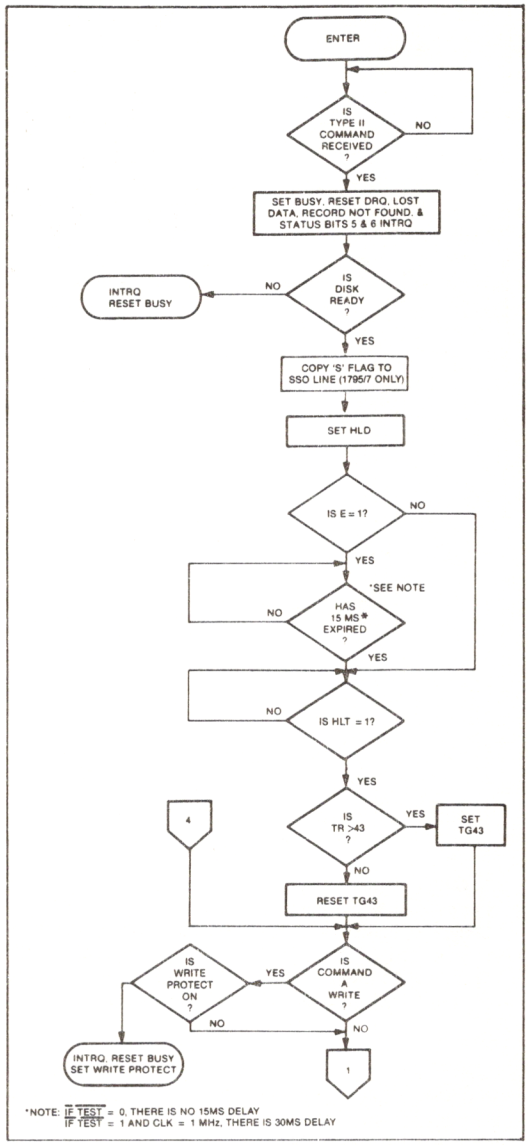

TYPE II COMMAND

Each of the Type II Commands contains an (m) flag which determines if multiple records (sectors) are to be read or written, depending upon the command. If m = 0, a single sector is read or written and an interrupt is generated at the completion of the command. If m = 1, multiple records are read or written with the sector register internally updated so that an address verification can occur on the next

record. The FD179X will continue to read or write multiple records and update the sector register in numerical ascending sequence until the sector register exceeds the number of sectors on the track or until the Force Interrupt command is loaded into the Command Register, which terminates the command and generates an interrupt.

For example: If the FD179X is instructed to read sector 27 and there are only 26 on the track, the sector register exceeds the number available. The FD179X will search for 5 disk revolutions, interrupt out, reset busy, and set the record not found status bit.

The Type II commands for 1791-94 also contain side select compare flags. When C = 0 (Bit 1) no side comparison is made. When C = 1, the LSB of the side number is read off the ID Field of the disk and compared with the contents of the (S) flag (Bit 3). If the S flag compares with the side number recorded in the ID field, the FD179X continues with the ID search. If a comparison is not made within 5 index pulses, the interrupt line is made active and the Record-Not-Found status bit is set.

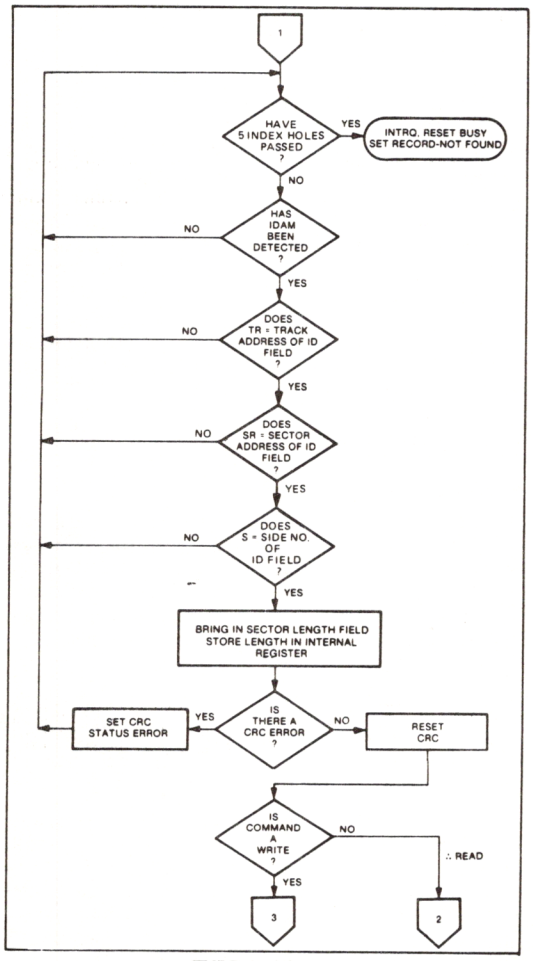

TYPE II COMMAND

The Type II and III commands for the 1795-97 contain a side select flag (Bit 1). When U = 0, SSO is updated to 0. Similarly, U = 1 updates SSO to 1. The chip compares the SSO to the ID field. If they do not compare within 5 revolutions the interrupt line is made active and the RNF status bit is set.

The 1795/7 READ SECTOR and WRITE SECTOR commands include a 'L' flag. The 'L' flag, in conjunction with the sector length byte of the ID Field, allows different byte lengths to be implemented in each sector. For IBM compatability, the 'L' flag should be set to a one.

READ SECTOR

Upon receipt of the Read Sector command, the head is loaded, the Busy status bit set, and when an ID field is encountered that has the correct track number, correct sector number, correct side number, and correct CRC, the data field is presented to the computer. The Data Address

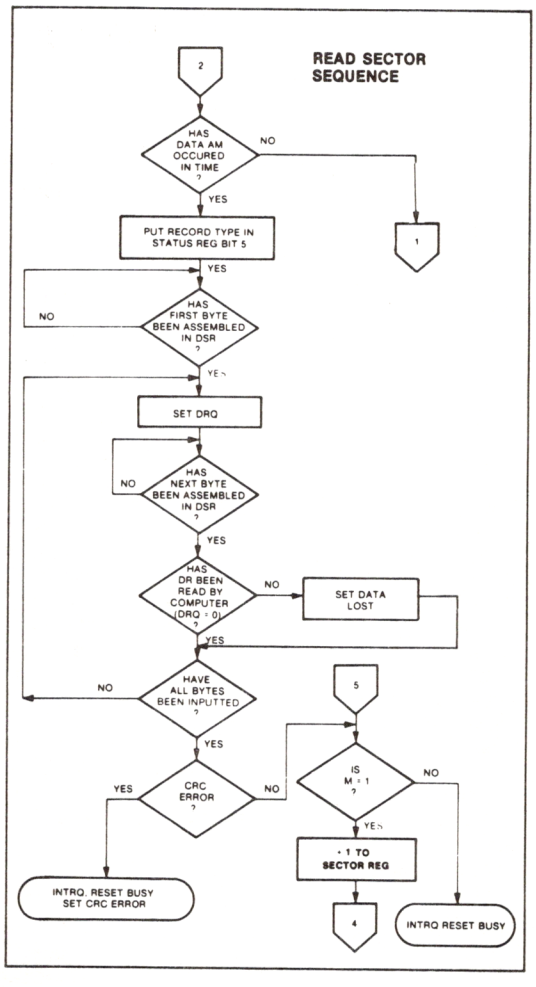

TYPE II COMMAND

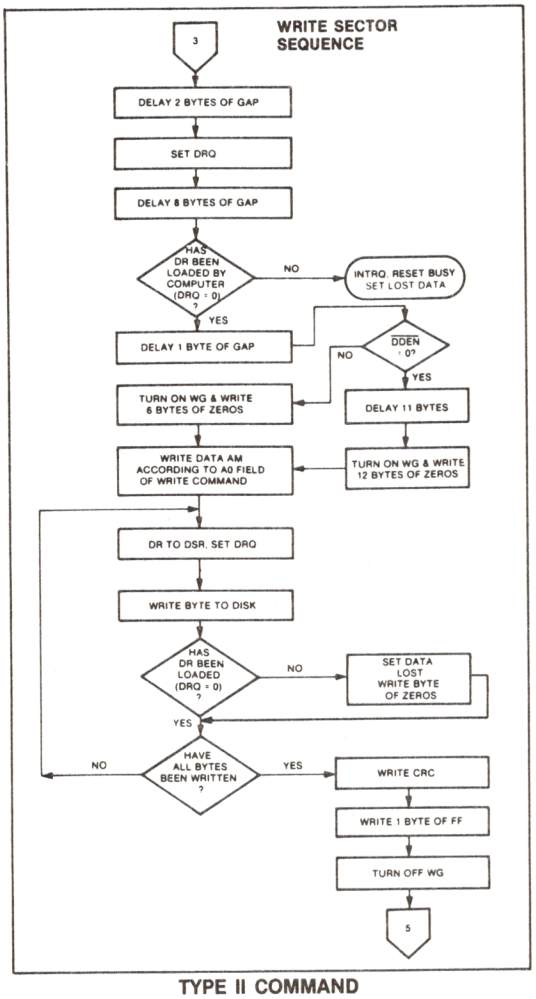

TYPE II COMMAND

Mark of the data field must be found within 30 bytes in single density and 43 bytes in double density of the last ID field CRC byte; if not, the ID field is searched for and verified again followed by the Data Address Mark search. If after 5 revolutions the DAM cannot be found, the Record Not Found status bit is set and the operation is terminated.

When the first character or byte of the data field has been shifted through the DSR, it is transferred to the DR, and DRQ is generated. When the next byte is accumulated in the DSR, it is transferred to the DR and another DRQ is generated. If the Computer has not read the previous contents of the DR before a new character is transferred that character is lost and the Lost Data Status bit is set. This sequence continues until the complete data field has been inputted to the computer. If there is a CRC error at the end of the data field, the CRC error status bit is set, and the command is terminated (even if it is a multiple record command).

At the end of the Read operation, the type of Data Address Mark encountered in the data field is recorded in the Status Register (Bit 5) as shown:

STATUS BIT 5	
1	Deleted Data Mark
0	Data Mark

WRITE SECTOR

Upon receipt of the Write Sector command, the head is loaded (HLD active) and the Busy status bit is set. When an ID field is encountered that has the correct track number, correct sector number, correct side number, and correct CRC, a DRQ is generated. The FD179X counts off 11 bytes in single density and 22 bytes in double density from the CRC field and the Write Gate (WG) output is made active if the DRQ is serviced (i.e., the DR has been loaded by the computer). If DRQ has not been serviced, the command is terminated and the Lost Data status bit is set. If the DRQ has been serviced, the WG is made active and six bytes of zeroes in single density and 12 bytes in double density are then written on the disk. At this time the Data Address Mark is then written on the disk as determined by the a_0 field of the command as shown below:

a_0	Data Address Mark (Bit 0)
1	Deleted Data Mark
0	Data Mark

The FD179X then writes the data field and generates DRQ's to the computer. If the DRQ is not serviced in time for continuous writing the Lost Data Status Bit is set and a byte of zeroes is written on the disk. The command is not terminated. After the last data byte has been written on the disk, the two-byte CRC is computed internally and written on the disk followed by one byte of logic ones in FM or in MFM. The WG output is then deactivated. For a 2 MHz clock the INTRQ will set 8 to 12 μsec after the last CRC byte is written. For partial sector writing, the proper method is to write the data and fill the balance with zeroes. By letting the chip fill the zeroes, errors may be masked by the lost data status and improper CRC Bytes.

TYPE III COMMANDS

READ ADDRESS

Upon receipt of the Read Address command, the head is loaded and the Busy Status Bit is set. The next encountered ID field is then read in from the disk, and the six data bytes of the ID field are assembled and transferred to the DR, and a DRQ is generated for each byte. The six bytes of the ID field are shown below:

TRACK ADDR	SIDE NUMBER	SECTOR ADDRESS	SECTOR LENGTH	CRC 1	CRC 2
1	2	3	4	5	6

Although the CRC characters are transferred to the computer, the FD179X checks for validity and the CRC error status bit is set if there is a CRC error. The Track Address of the ID field is written into the sector register so that a comparison can be made by the user. At the end of the operation an interrupt is generated and the Busy Status is reset.

READ TRACK

Upon receipt of the READ track command, the head is loaded, and the Busy Status bit is set. Reading starts with the leading edge of the first encountered index pulse and continues until the next index pulse. All Gap, Header, and data bytes are assembled and transferred to the data register and DRQ's are generated for each byte. The accumulation of bytes is synchronized to each address mark encountered. An interrupt is generated at the completion of the command.

This command has several characteristics which make it suitable for diagnostic purposes. They are: the Read Gate is not activated during the command; no CRC checking is performed; gap information is included in the data stream; the internal side compare is not performed; and the address mark detector is on for the duration of the command. Because the A.M. detector is always on, write splices or noise may cause the chip to look for an A.M. If an address mark does not appear on schedule the Lost Data status flag is set.

The ID A.M., ID field, ID CRC bytes, DAM, Data, and Data CRC Bytes for each sector will be correct. The Gap Bytes may be read incorrectly during write-splice time because of synchronization.

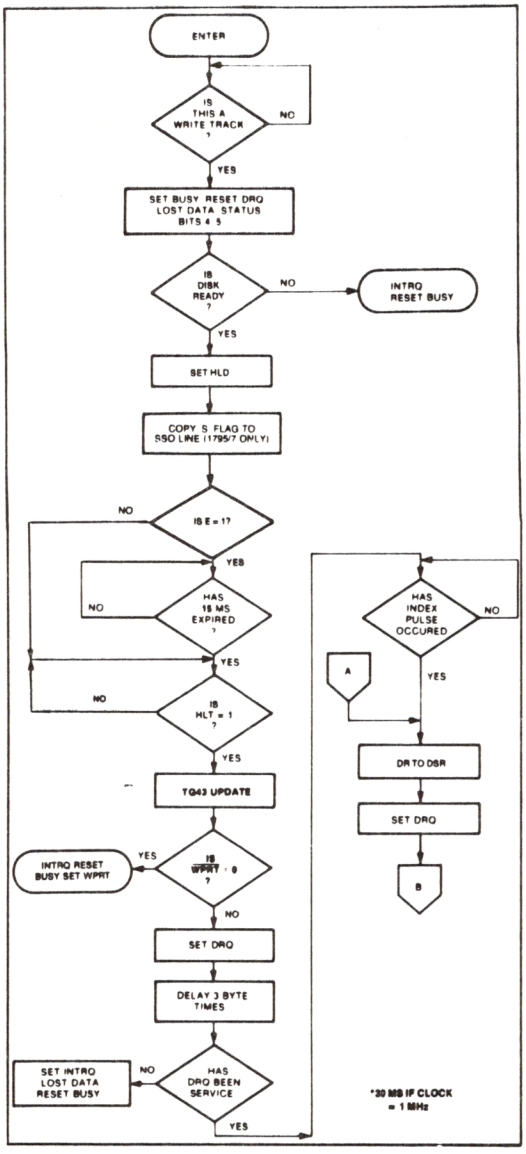

TYPE III COMMAND WRITE TRACK

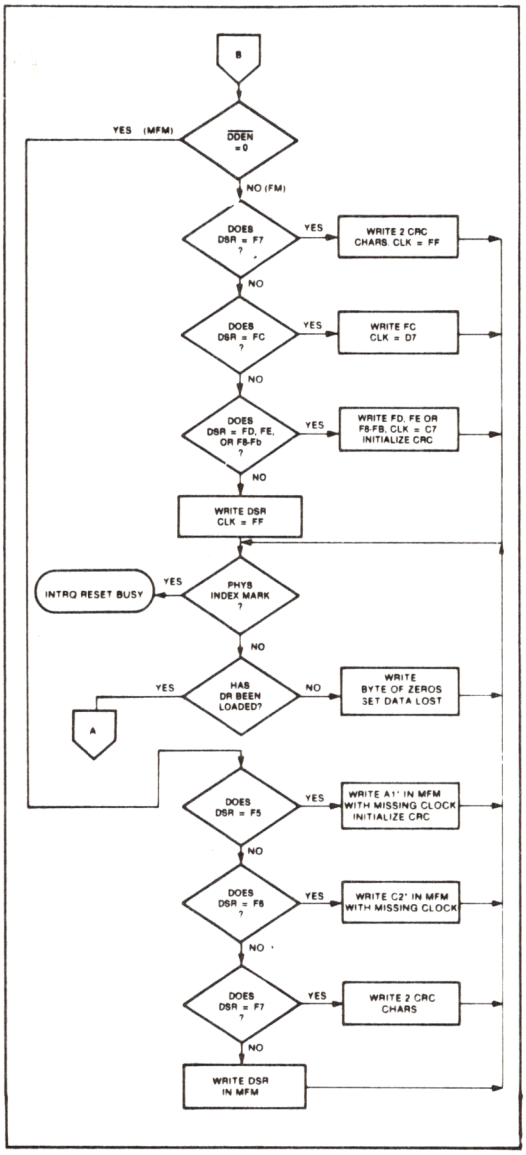

TYPE III COMMAND WRITE TRACK

CONTROL BYTES FOR INITIALIZATION

DATA PATTERN IN DR (HEX)	FD179X INTERPRETATION IN FM ($\overline{DDEN}$ = 1)	FD1791/3 INTERPRETATION IN MFM ($\overline{DDEN}$ = 0)
00 thru F4	Write 00 thru F4 with CLK = FF	Write 00 thru F4, in MFM
F5	Not Allowed	Write A1* in MFM, Preset CRC
F6	Not Allowed	Write C2** in MFM
F7	Generate 2 CRC bytes	Generate 2 CRC bytes
F8 thru FB	Write F8 thru FB, Clk = C7, Preset CRC	Write F8 thru FB, in MFM
FC	Write FC with Clk = D7	Write FC in MFM
FD	Write FD with Clk = FF	Write FD in MFM
FE	Write FE, Clk = C7, Preset CRC	Write FE in MFM
FF	Write FF with Clk = FF	Write FF in MFM

*Missing clock transition between bits 4 and 5

**Missing clock transition between bits 3 & 4

WRITE TRACK FORMATTING THE DISK

(Refer to section on Type III commands for flow diagrams.)

Formatting the disk is a relatively simple task when operating programmed I/O or when operating under DMA with a large amount of memory. Data and gap information must be provided at the computer interface. Formatting the disk is accomplished by positioning the R/W head over the desired track number and issuing the Write Track command.

Upon receipt of the Write Track command, the head is loaded and the Busy Status bit is set. Writing starts with the leading edge of the first encountered index pulse and continues until the next index pulse, at which time the interrupt is activated. The Data Request is activated immediately upon receiving the command, but writing will not start until after the first byte has been loaded into the Data Register. If the DR has not been loaded by the time the index pulse is encountered the operation is terminated making the device Not Busy, the Lost Data Status Bit is set, and the Interrupt is activated. If a byte is not present in the DR when needed, a byte of zeroes is substituted.

This sequence continues from one index mark to the next index mark. Normally, whatever data pattern appears in the data register is written on the disk with a normal clock pattern. However, if the FD179X detects a data pattern of F5 thru FE in the data register, this is interpreted as data address marks with missing clocks or CRC generation.

The CRC generator is initialized when any data byte from F8 to FE is about to be transferred from the DR to the DSR in FM or by receipt of F5 in MFM. An F7 pattern will generate two CRC characters in FM or MFM. As a consequence, the patterns F5 thru FE must not appear in the gaps, data fields, or ID fields. Also, CRC's must be generated by an F7 pattern.

Disks may be formatted in IBM 3740 or System 34 formats with sector lengths of 128, 256, 512, or 1024 bytes.

TYPE IV COMMANDS

The Forced Interrupt command is generally used to terminate a multiple sector read or write command or to insure Type I status in the status register. This command can be loaded into the command register at any time. If there is a current command under execution (busy status bit set) the command will be terminated and the busy status bit reset.

The lower four bits of the command determine the conditional interrupt as follows:

I_0 = Not-Ready to Ready Transition
I_1 = Ready to Not-Ready Transition
I_2 = Every Index Pulse
I_3 = Immediate Interrupt

The conditional interrupt is enabled when the corresponding bit positions of the command (I_3 - I_0) are set to a 1. Then, when the condition for interrupt is met, the INTRQ line will go high signifying that the condition specified has occurred. If I_3 - I_0 are all set to zero (HEX D0), no interrupt will occur but any command presently under execution will be immediately terminated. When using the immediate interrupt condition (I_3 = 1) an interrupt will be immediately generated and the current command terminated. Reading the status or writing to the command register will not automatically clear the interrupt. The HEX D0 is the only command that will enable the immediate interrupt (HEX D8) to clear on a subsequent load command register or read status register operation. Follow a HEX D8 with D0 command.

Wait 8 micro sec (double density) or 16 micro sec (single density before issuing a new command after issuing a forced interrupt (times double when clock = 1 MHz). Loading a new command sooner than this will nullify the forced interrupt.

Forced interrupt stops any command at the end of an internal micro-instruction and generates INTRQ when the specified condition is met. Forced interrupt will wait until ALU operations in progress are complete (CRC calculations, compares, etc.).

More than one condition may be set at a time. If for example, the READY TO NOT-READY condition (I_1 = 1) and the Every Index Pulse (I_2 = 1) are both set, the resultant command would be HEX "DA". The "OR" function is performed so that either a READY TO NOT- READY or the next Index Pulse will cause an interrupt condition.

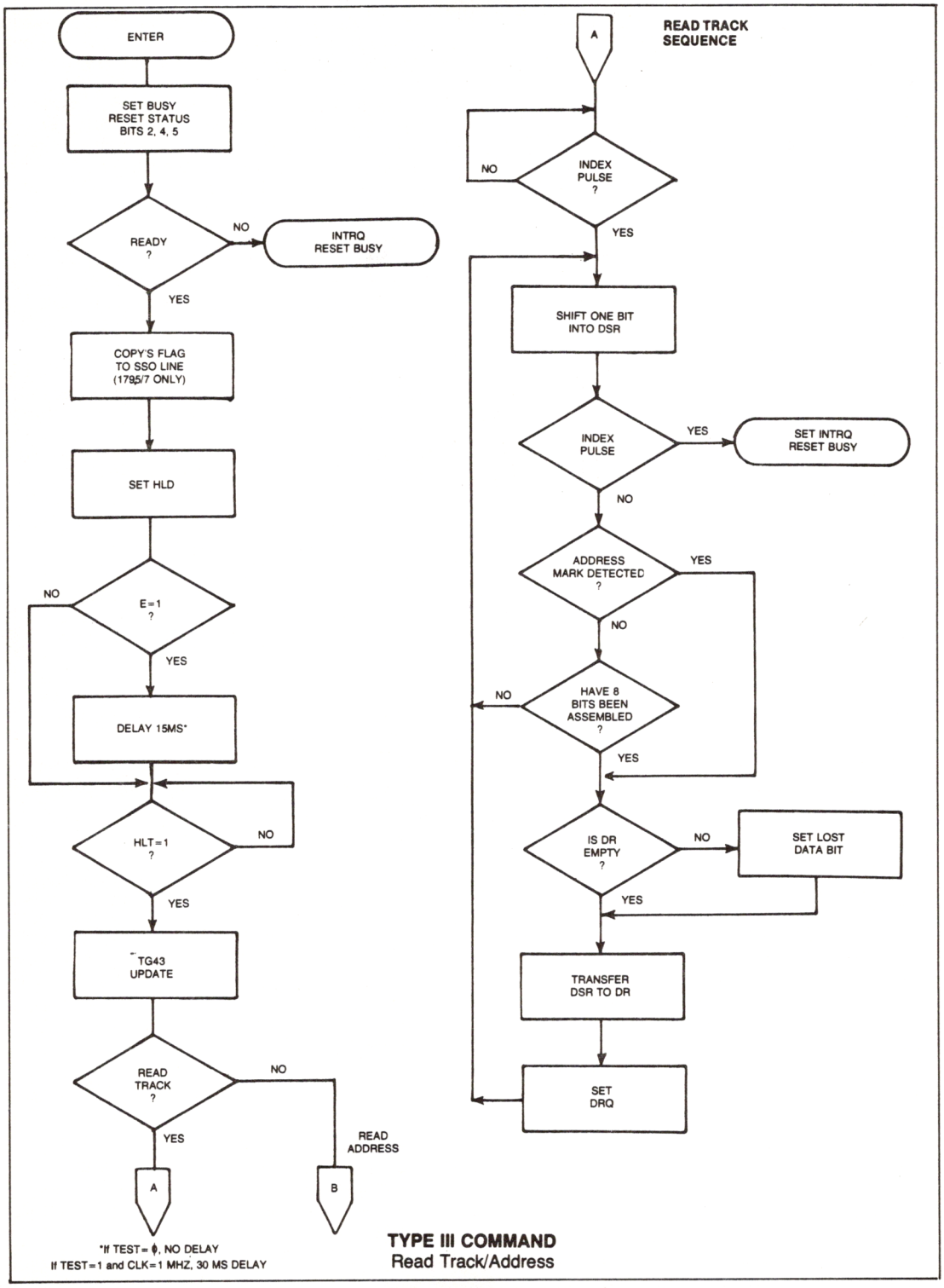

TYPE III COMMAND
Read Track/Address

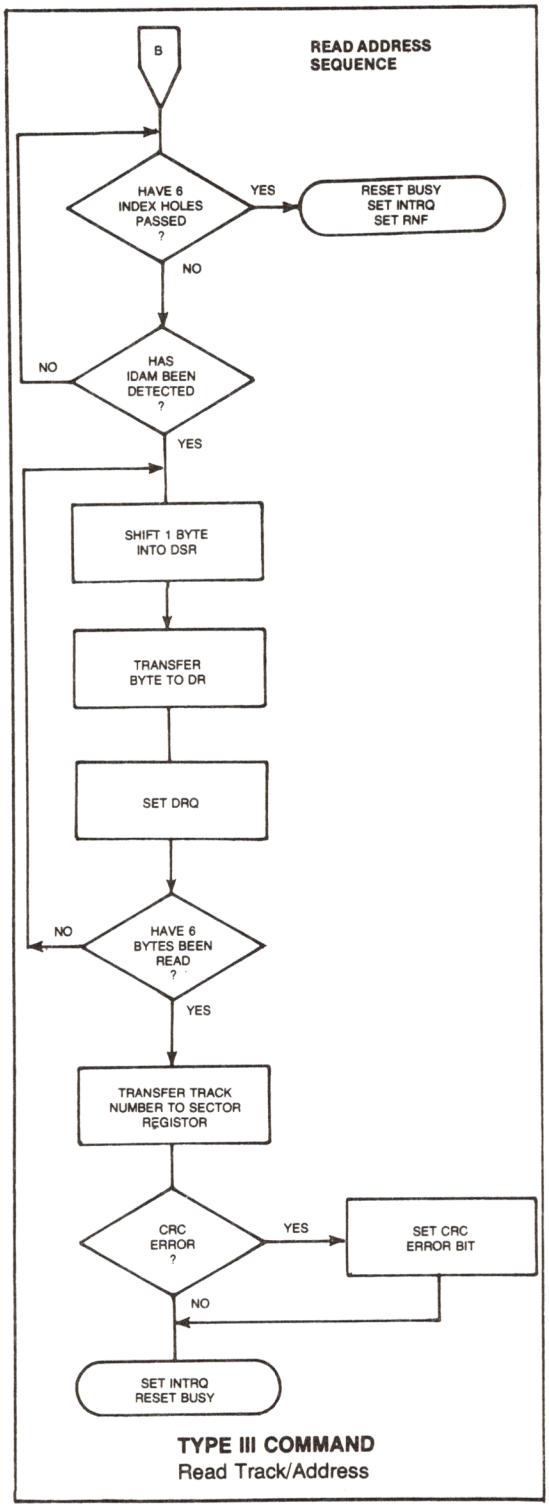

TYPE III COMMAND
Read Track/Address

STATUS REGISTER

Upon receipt of any command, except the Force Interrupt command, the Busy Status bit is set and the rest of the status bits are updated or cleared for the new command. If the Force Interrupt Command is received when there is a current command under execution, the Busy status bit is reset, and the rest of the status bits are unchanged. If the Force Interrupt command is received when there is not a current command under execution, the Busy Status bit is reset and the rest of the status bits are updated or cleared. In this case, Status reflects the Type I commands.

The user has the option of reading the status register through program control or using the DRQ line with DMA or interrupt methods. When the Data register is read the DRQ bit in the status register and the DRQ line are automatically reset. A write to the Data register also causes both DRQ's to reset.

The busy bit in the status may be monitored with a user program to determine when a command is complete, in lieu of using the INTRQ line. When using the INTRQ, a busy status check is not recommended because a read of the status register to determine the condition of busy will reset the INTRQ line.

The format of the Status Register is shown below:

(BITS)							
7	6	5	4	3	2	1	0
S7	S6	S5	S4	S3	S2	S1	S0

Status varies according to the type of command executed as shown in Table 4.

Because of internal sync cycles, certain time delays must be observed when operating under programmed I/O. They are: (times double when clock = 1 MHz)

Operation	Next Operation	Delay Req'd. FM	MFM
Write to Command Reg.	Read Busy Bit (Status Bit 0)	12 μs	6 μs
Write to Command Reg.	Read Status Bits 1-7	28 μs	14 μs
Write Any Register	Read From Diff. Register	0	0

IBM 3740 FORMAT — 128 BYTES/SECTOR

Shown below is the IBM single-density format with 128 bytes/sector. In order to format a diskette, the user must issue the Write Track command, and load the data register with the following values. For every byte to be written, there is one Data Request.

IBM 3740 FORMAT — 128 BYTES/SECTOR

Shown below is the IBM single-density format with 128 bytes/sector. In order to format a diskette, the user must issue the Write Track command, and load the data register with the following values. For every byte to be written, there is one Data Request.

	NUMBER OF BYTES	HEX VALUE OF BYTE WRITTEN
	40	FF (or 00)[1]
	6	00
	1	FC (Index Mark)
*	26	FF (or 00)[1]
	6	00
	1	FE (ID Address Mark)
	1	Track Number
	1	Side Number (00 or 01)
	1	Sector Number (1 thru 1A)
	1	00 (Sector Length)
	1	F7 (2 CRC's written)
	11	FF (or 00)[1]
	6	00
	1	FB (Data Address Mark)
	128	Data (IBM uses E5)
	1	F7 (2 CRC's written)
	27	FF (or 00)[1]
	247**	FF (or 00)[1]

*Write bracketed field 26 times
**Continue writing until FD179X interrupts out.
Approx. 247 bytes.
1-Optional '00' on 1795/7 only.

IBM SYSTEM 34 FORMAT- 256 BYTES/SECTOR

Shown below is the IBM dual-density format with 256 bytes/sector. In order to format a diskette the user must issue the Write Track command and load the data register with the following values. For every byte to be written, there is one data request.

NUMBER OF BYTES	HEX VALUE OF BYTE WRITTEN
80	4E
12	00
3	F6 (Writes C2)
1	FC (Index Mark)
* 50	4E
12	00
3	F5 (Writes A1)
1	FE (ID Address Mark)
1	Track Number (0 thru 4C)
1	Side Number (0 or 1)
1	Sector Number (1 thru 1A)
1	01 (Sector Length)
1	F7 (2 CRCs written)
22	4E
12	00
3	F5 (Writes A1)
1	FB (Data Address Mark)
256	DATA
1	F7 (2 CRCs written)
54	4E
598**	4E

*Write bracketed field 26 times
**Continue writing until FD179X interrupts out.
Approx. 598 bytes.

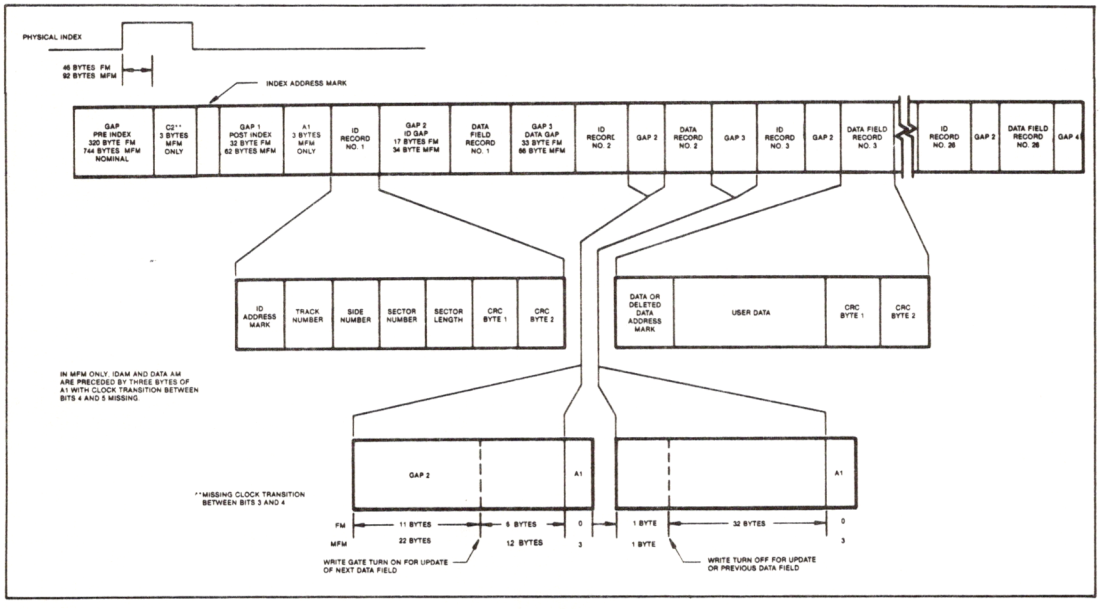

IBM TRACK FORMAT

1. NON-IBM FORMATS

Variations in the IBM formats are possible to a limited extent if the following requirements are met:

1) Sector size must be 128, 256, 512 or 1024 bytes.
2) Gap 2 cannot be varied from the IBM format.
3) 3 bytes of A1 must be used in MFM.

In addition, the Index Address Mark is not required for operation by the FD179X. Gap 1, 3, and 4 lengths can be as short as 2 bytes for FD179X operation, however PLL lock up time, motor speed variation, write-splice area, etc. will add more bytes to each gap to achieve proper operation. It is recommended that the IBM format be used for highest system reliability.

	FM	MFM
Gap I	16 bytes FF	32 bytes 4E
Gap II	11 bytes FF	22 bytes 4E
*	6 bytes 00	12 bytes 00
*		3 bytes A1
Gap III**	10 bytes FF	24 bytes 4E
	4 bytes 00	8 bytes 00
		3 bytes A1
Gap IV	16 bytes FF	16 bytes 4E

*Byte counts must be exact.
**Byte counts are minimum, except exactly 3 bytes of A1 must be written.

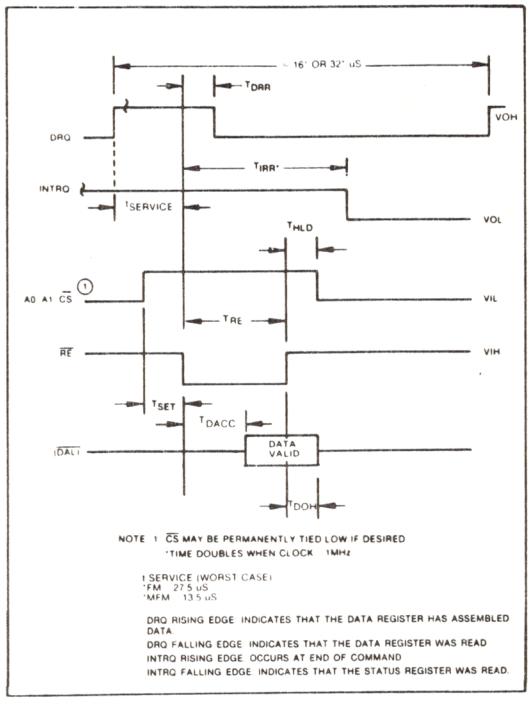

READ ENABLE TIMING

TIMING CHARACTERISTICS

T_A = 0°C to 70°C, V_{DD} = + 12V ± .6V, V_{SS} = 0V, V_{CC} = +5V ± .25V

READ ENABLE TIMING (See Note 6, Page 21)

SYMBOL	CHARACTERISTIC	MIN.	TYP.	MAX.	UNITS	CONDITIONS
TSET	Setup ADDR & CS to $\overline{RE}$	50			nsec	
THLD	Hold ADDR & CS from $\overline{RE}$	10			nsec	
TRE	$\overline{RE}$ Pulse Width	400			nsec	C_L = 50 pf
TDRR	DRQ Reset from $\overline{RE}$		400	500	nsec	
TIRR	INTRQ Reset from $\overline{RE}$		500	3000	nsec	See Note 5
TDACC	Data Access from $\overline{RE}$			350	nsec	C_L = 50 pf
TDOH	Data Hold From $\overline{RE}$	50		150	nsec	C_L = 50 pf

WRITE ENABLE TIMING (See Note 6, Page 21)

SYMBOL	CHARACTERISTIC	MIN.	TYP.	MAX.	UNITS	CONDITIONS
TSET	Setup ADDR & CS to $\overline{WE}$	50			nsec	
THLD	Hold ADDR & CS from $\overline{WE}$	10			nsec	
TWE	$\overline{WE}$ Pulse Width	350			nsec	
TDRR	DRQ Reset from $\overline{WE}$		400	500	nsec	
TIRR	INTRQ Reset from $\overline{WE}$		500	3000	nsec	See Note 5
TDS	Data Setup to $\overline{WE}$	250			nsec	
TDH	Data Hold from $\overline{WE}$	70			nsec	

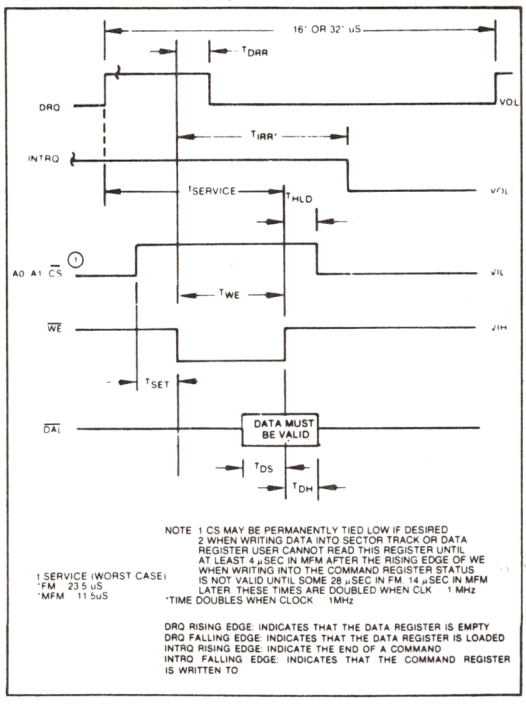

WRITE ENABLE TIMING

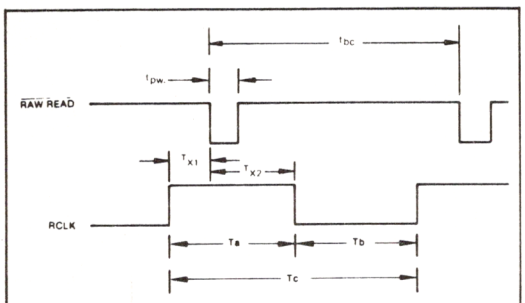

				NOMINAL		
DISKETTE	MODE	$\overline{DDEN}$	CLK	T_a	T_b	T_c
8"	MFM	0	2 MHz	1 μs	1 μs	2 μs
8"	FM	1	2 MHz	2 μs	2μs	4 μs
5"	MFM	0	1 MHz	2 μs	2μs	4 μs
5"	FM	1	1 MHz	4 μs	4 μs	8 μs

INPUT DATA TIMING

INPUT DATA TIMING:

SYMBOL	CHARACTERISTIC	MIN.	TYP.	MAX.	UNITS	CONDITIONS
Tpw	$\overline{\text{Raw Read}}$ Pulse Width	100	200		nsec	See Note 1
tbc	$\overline{\text{Raw Read}}$ Cycle Time	1500	2000		nsec	1800 ns @ 70°C
Tc	RCLK Cycle Time	1500	2000		nsec	1800 ns @ 70°C
Tx_1	RCLK hold to $\overline{\text{Raw Read}}$	40			nsec	See Note 1
Tx_2	$\overline{\text{Raw Read}}$ hold to RCLK	40			nsec	See Note 1

WRITE DATA TIMING: (ALL TIMES DOUBLE WHEN CLK = 1 MHz) (See Note 6, Page 21)

SYMBOL	CHARACTERISTICS	MIN.	TYP.	MAX.	UNITS	CONDITIONS
Twp	Write Data Pulse Width		500	**650**	nsec	FM
			200	**350**	nsec	MFM
Twg	Write Gate to Write Data		2		μsec	FM
			1		μsec	MFM
Tbc	Write data cycle Time		2,3, or 4		μsec	±CLK Error
Ts	Early (Late) to Write Data	125			nsec	MFM
Th	Early (Late) From Write Data	125			nsec	MFM
Twf	Write Gate off from WD		2		μsec	FM
			1		μsec	MFM
Twdl	WD Valid to Clk	100			nsec	CLK=1 MHZ
		50			nsec	CLK=2 MHZ
Twd2	WD Valid after CLK	100			nsec	CLK=1 MHZ
		30			nsec	CLK=2 MHZ

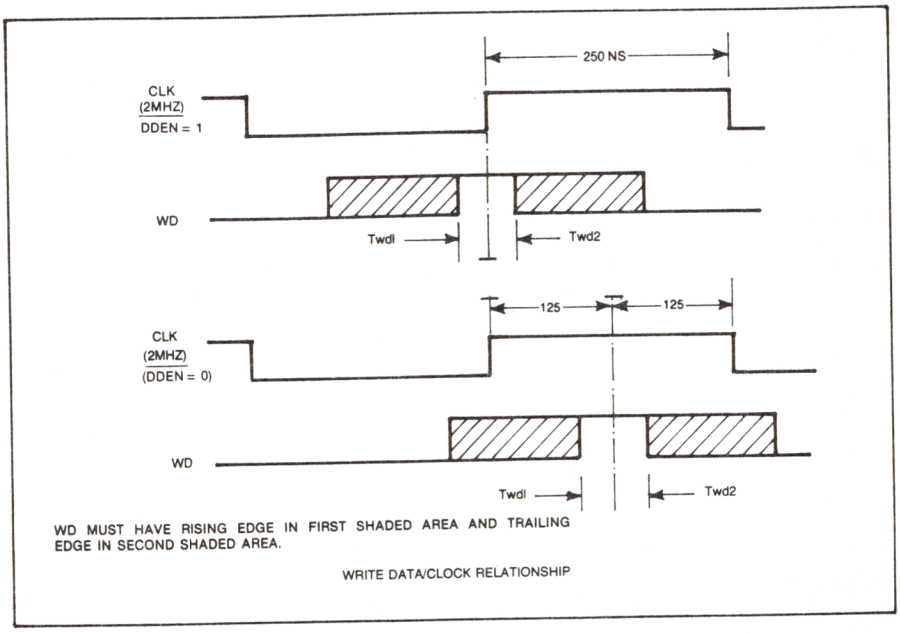

WRITE DATA TIMING

MISCELLANEOUS TIMING: (Times Double When Clock = 1 MHz) (See Note 6, Page 21)

SYMBOL	CHARACTERISTIC	MIN.	TYP.	MAX.	UNITS	CONDITIONS
TCD_1	Clock Duty (low)	230	250	20000	nsec	
TCD_2	Clock Duty (high)	200	250	20000	nsec	
TSTP	Step Pulse Output	2 or 4			µsec	See Note 5
TDIR	Dir Setup to Step		12		µsec	± CLK ERROR
TMR	Master Reset Pulse Width	50			µsec	
TIP	Index Pulse Width	10			µsec	See Note 5
TWF	Write Fault Pulse Width	10			µsec	

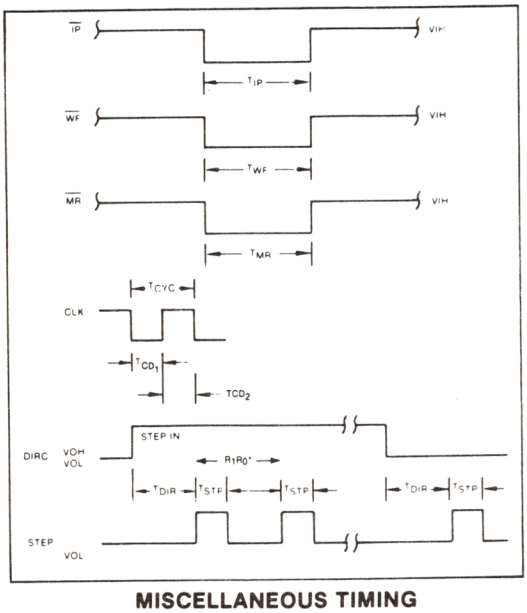

MISCELLANEOUS TIMING

*FROM STEP RATE TABLE

NOTES:

1. Pulse width on RAW READ (Pin 27) is normally 100-300 ns. However, pulse may be any width if pulse is entirely within window. If pulse occurs in both windows, then pulse width must be less than 300 ns for MFM at CLK = 2 MHz and 600 ns for FM at 2 MHz. Times double for 1 MHz.
2. A PPL Data Separator is recommended for 8" MFM.
3. tbc should be 2 μs, nominal in MFM and 4 μs nominal in FM. Times double when CLK = 1 MHz.
4. RCLK may be high or low during $\overline{\text{RAW READ}}$ (Polarity is unimportant).
5. Times double when clock = 1 MHz.
6. Output timing readings are at V_{OL} = 0.8v and V_{OH} = 2.0v.

Table 4. STATUS REGISTER SUMMARY

BIT	ALL TYPE I COMMANDS	READ ADDRESS	READ SECTOR	READ TRACK	WRITE SECTOR	WRITE TRACK
S7	NOT READY	NOT READY	NOT READY	NOT READY	NOT READY	NOT READY
S6	WRITE PROTECT	0	0	0	WRITE PROTECT	WRITE PROTECT
S5	HEAD LOADED	0	RECORD TYPE	0	WRITE FAULT	WRITE FAULT
S4	SEEK ERROR	RNF	RNF	0	RNF	0
S3	CRC ERROR	CRC ERROR	CRC ERROR	0	CRC ERROR	0
S2	TRACK 0	LOST DATA	LOST DATA	LOST DATA	LOST DATA	LOST DATA
S1	INDEX PULSE	DRQ	DRQ	DRQ	DRQ	DRQ
S0	BUSY	BUSY	BUSY	BUSY	BUSY	BUSY

STATUS FOR TYPE I COMMANDS

BIT NAME	MEANING
S7 NOT READY	This bit when set indicates the drive is not ready. When reset it indicates that the drive is ready. This bit is an inverted copy of the Ready input and logically 'ored' with MR.
S6 PROTECTED	When set, indicates Write Protect is activated. This bit is an inverted copy of $\overline{\text{WRPT}}$ input.
S5 HEAD LOADED	When set, it indicates the head is loaded and engaged. This bit is a logical "and" of HLD and HLT signals.
S4 SEEK ERROR	When set, the desired track was not verified. This bit is reset to 0 when updated.
S3 CRC ERROR	CRC encountered in ID field.
S2 TRACK 00	When set, indicates Read/Write head is positioned to Track 0. This bit is an inverted copy of the $\overline{\text{TROO}}$ input.
S1 INDEX	When set, indicates index mark detected from drive. This bit is an inverted copy of the $\overline{\text{IP}}$ input.
S0 BUSY	When set command is in progress. When reset no command is in progress.

STATUS FOR TYPE II AND III COMMANDS

BIT NAME	MEANING
S7 NOT READY	This bit when set indicates the drive is not ready. When reset, it indicates that the drive is ready. This bit is an inverted copy of the Ready input and 'ored' with MR. The Type II and III Commands will not execute unless the drive is ready.
S6 WRITE PROTECT	On Read Record: Not Used. On Read Track: Not Used. On any Write: It indicates a Write Protect. This bit is reset when updated.
S5 RECORD TYPE/ WRITE FAULT	On Read Record: It indicates the record-type code from data field address mark. 1 = Deleted Data Mark. 0 = Data Mark. On any Write: It indicates a Write Fault. This bit is reset when updated.
S4 RECORD NOT FOUND (RNF)	When set, it indicates that the desired track, sector, or side were not found. This bit is reset when updated.
S3 CRC ERROR	If S4 is set, an error is found in one or more ID fields; otherwise it indicates error in data field. This bit is reset when updated.
S2 LOST DATA	When set, it indicates the computer did not respond to DRQ in one byte time. This bit is reset to zero when updated.
S1 DATA REQUEST	This bit is a copy of the DRQ output. When set, it indicates the DR is full on a Read Operation or the DR is empty on a Write operation. This bit is reset to zero when updated.
S0 BUSY	When set, command is under execution. When reset, no command is under execution.

ELECTRICAL CHARACTERISTICS

Absolute Maximum Ratings

V_{DD} with repect to V_{SS} (ground): + 15 to − 0.3V

Voltage to any input with respect to V_{SS} = + 15 to − 0.3V

I_{CC} = 60 MA (35 MA nominal)

I_{DD} = 15 MA (10 MA nominal)

C_{IN} & C_{OUT} = 15 pF max with all pins grounded except one under test.

Operating temperature = 0°C to 70°C

Storage temperature = − 55°C to + 125°C

OPERATING CHARACTERISTICS (DC)

TA = 0°C to 70°C, V_{DD} = + 12V ± .6V, V_{SS} = 0V, V_{CC} = + 5V ± .25V

SYMBOL	CHARACTERISTIC	MIN.	MAX.	UNITS	CONDITIONS
I_{IL}	Input Leakage		10	μA	V_{IN} = V_{DD}**
I_{OL}	Output Leakage		10	μA	V_{OUT} = V_{DD}
V_{IH}	Input High Voltage	2.6		V	
V_{IL}	Input Low Voltage		0.8	V	
V_{OH}	Output High Voltage	2.8		V	I_O = − 100 μA
V_{OL}	Output Low Voltage		0.45	V	I_O = 1.6 mA*
P_D	Power Dissipation		0.6	W	

*1792 and 1794 I_O = 1.0 mA

**Leakage conditions are for input pins without internal pull-up resistors. Pins 22, 23, 33, 36, and 37 have pull-up resistors. See Tech Memo #115 for testing procedures.

See page 725 for ordering information.

WESTERN DIGITAL
CORPORATION

FD179X Application Notes

INTRODUCTION

Over the past several years, the Floppy Disk Drive has become the most popular on-line storage device for mini and microcomputer systems. Its fast access time, reliability and low cost-per-bit ratio enables the Floppy Disk Drive to be *the* solution in mass storage for microprocessor systems. The drive interface to the Host system is standardized, allowing the OEM to substitute one drive for another with minimum hardware/ software modifications.

Since Floppy Disk Data is stored and retrieved as a self-clocking serial data stream, some means of separating the clock from the data and assembling this data in parallel form must be accomplished. Data is stored on individual Tracks of the media, requiring control of a stepper motor to move the Read/Write head to a predetermined Track. Byte sychronization must also be accomplished to insure that the parallel data is properly assembled. After all the design considerations are met, the final controller can consist of 40 or more TTL packages.

To alleviate the burden of Floppy Disk Controller design, Western Digital has developed a Family of LSI Floppy Disk controller devices. Through its own set of macro commands, the FD179X Controller Family will perform all the functions necessary to read and write data to the drive. Both the 8" standard and 5¼" mini-floppy are supported with single or double density recording techniques. The FD179X is compatible with the IBM 3740 (FM) data format, or the System 34 (MFM) standards. Provisions for non-standard formats and variable sector lengths have been included to provide more storage capability per track. Requiring standard +5, +12 power supplies the FD179X is available in a standard 40 pin dual-in-line package.

The FD179X Family consists of 6 devices. The differences between these devices is summarized in Figure 1. The 1792 and 1794 are "single density only" devices, with the Double Density Enable pin (DDEN) left open by the user. Both True and inverted Data bus devices are available. Since the 179X can only drive one TTL Load, a true data bus system may use the 1791 with external inverting buffers to arrive at a true bus scheme. The 1795 and 1797 are identical to the 1791 and 1793, except a side select output has been added that is controlled through the Command Register.

SYSTEM DESIGN

The first consideration in Floppy Disk Design is to determine which type of drive to use. The choice ranges from single-density single sided mini-floppy to the 8" double-density double-sided drive. Figure 2 illustrates the various drive and data capacities associated with each type. Although the 8" double-density drive offers twice as much storage, a more complex data separator and the addition of Write Precompensation circuits are mandatory for reliable data transfers. Whether to go with 8" double-density or not is dependent upon PC board space and the additional circuitry needed to accurately recover data with extreme bit shifts. The byte transfer time defines the nominal time required to transfer one byte of data from the drive. If the CPU used cannot service a byte in this time, then a DMA scheme will probably be required. The 179X also needs a few microseconds for overhead, which is subtracted from the transfer time. Figure 3 shows the actual service times that the CPU must provide on a byte-by-byte basis. If these times are not met, bytes of data will be lost during a read or write operation. For each byte transferred, the 179X generates a DRQ (Data Request) signal on Pin 38. A bit is provided in the status register which is also set upon receipt of a byte from the Disk. The user has the option of reading the status register through program control or using the DRQ Line with DMA or interrupt schemes. When the data register is read, both the status register DRQ bit and the DRQ Line are automatically reset. The next full byte will again set the DRQ and the process continues until the sector(s) are read. The Write operation works exactly the same way, except a WRITE to the Data Register causes a reset of both DRQ's.

RECORDING FORMATS

The FD179X accepts data from the disk in a Frequency-Modulated (FM) or Modified-Frequency-Modulated (MFM) Format. Shown in Figures 4A and 4B are both these Formats when writing a Hexidecimal byte of 'D2'. In the FM mode, the 8 bits of data are broken up into "bit cells." Each bit cell begins with a clock pulse and the center of the bit cell defines the data. If the data bit = 0, no pulse is written; if the data = 1, a pulse is written in the center of the cell. For the 8" drive, each clock is written 4 microseconds apart.

In the MFM mode, clocks are decoded into the data stream. The byte is again broken up into bit cells, with the data bit written in the center of the bit cell if data = 1. Clocks are only written if both surrounding data bits are zero. Figure 4B shows that this occurs only once between Bit cell 4 and 5. Using this encoding scheme, pulses can occur 2, 3 or 4 microseconds apart. The bit cell time is now 2 microseconds; twice as much data can be recorded without increasing the Frequency rate due to this encoding scheme.

The 179X was designed to be compatible with the IBM 3740 (FM) and System 34 (MFM) Formats. Although most users do not have a need for data exchange with IBM mainframes, taking advantage of these well studied formats will insure a high degree of system performance. The 179X will allow a change in gap fields and sector lengths to increase usable storage capacity, but variations away from these standards is not recommended. Both IBM standards are soft-sector format. Because of the wide variation in address marks, the 179X can only support soft-sectored media. Hard sectored diskettes have continued to lose popularity, mainly due to the unavailability of a standard and the limitation of sector lengths imposed by the physical sector holes in the diskette.

PROCESSOR INTERFACE

The Interface of the 179X to the CPU consists of an 8-bit Bi-directional bus, read/write controls and optional interrupt lines. By selecting the device via the CHIP SELECT Line, each of the five internal registers can be accessed.

Shown below are the registers and their addresses:

PIN 3 CS	PIN 6 A_1	PIN 5 A_0	PIN 4 $\overline{RE}=0$	PIN 2 $\overline{WE}=0$
0	0	0	STATUS REG	COMMAND
0	0	1	TRACK REG	REG
0	1	0	SECTOR REG	TRACK REG
0	1	1	DATA REG	SECTOR REG
1	X	X	H1-Z	DATA REG
				H1-Z

Each time a command is issued to the 179X, the Busy bit is set and the INTRQ (Interrupt Request) Line is reset. The user has the option of checking the busy bit or use the INTRQ Line to denote command completion. The Busy bit will be reset whenever the 179X is idle and awaiting a new command. The INTRQ Line, once set, can only be reset by a READ of the status register or issuing a new command. The MR (Master Reset) Line does not affect INTRQ.

The A_0, A_1, Lines used for register selections can be configured at the CPU in a variety of ways. These lines may actually tie to CPU address lines, in which case the 179X will be memory-mapped and addressed like RAM. They may also be used under Program Control by tying to a port device such as the 8255, 6820, etc. As a diagnostic tool when checking out the CPU interface, the Track and Sector registers should respond like "RAM" when the 179X is idle (Busy = INTRQ = 0).

Because of internal synchronization cycles, certain time delays must be introduced when operating under Programmed I/O. The worst case delays are:

OPERATION	NEXT OPERATION	DELAY REQ'D
WRITE TO COMMAND REG	READ STATUS REGISTER	MFM = 14μs* FM = 28μs.
WRITE TO ANY REGISTER	READ FROM A DIFFERENT REG	NO DELAY

*NOTE: Times Double when CLK = 1MHz (5¼" drive)

Other CPU interface lines are CLK, $\overline{MR}$ and $\overline{DDEN}$. The CLK line should be 2MHz (8" drive) or 1MHz (5¼" drive) with a 50% duty cycle. Accuracy should be ±1% (crystal source) since all internal timing, including stepping rates, are based upon this clock.

The $\overline{MR}$ or Master Reset Line should be strobed a minimum of 50 microseconds upon each power-on condition. This line clears and initializes all internal registers and issues a restore command (Hex '03') on the rising edge. A quicker stepping rate can be written to the command register after a $\overline{MR}$, in which case the remaining steps will occur at the faster programmed rate. The 179X will issue a maximum of 255 stepping pulses in an attempt to expect the $\overline{TROO}$ line to go active low. This line should be connected to the drive's $\overline{TROO}$ sensor.

The $\overline{DDEN}$ line causes selection of either single density ($\overline{DDEN}$ = 1) or double density operation. $\overline{DDEN}$ should not be switched during a read or write operation.

FLOPPY DISK INTERFACE

The Floppy Disk Interface can be divided into three sections: Motor Control, Write Signals and Read Signals. All of these lines are capable of driving one TTL load and not compatible for direct connection to the drive. Most drives require an open-collector TTL interface with high current drive capability. This must be done on all outputs from the 179X. Inputs to the 179X may be buffered or tied to the Drives outputs, providing the appropriate resistor termination networks are used. Undershoot should not exceed −0.3 volts, while integrity of V_{IH} and V_{OH} levels should be kept within spec.

MOTOR CONTROL

Motor Control is accomplished by the STEP and DIRC Lines. The STEP Line issues stepping pulses with a period defined by the rate field in all Type I commands. The DIRC Line defines the direction of steps (DIRC = 1 STEP IN/DIRC = 0 STEP OUT).

Other Control Lines include the $\overline{IP}$ or Index Pulse. This Line is tied to the drives' Index L.E.D. *sensor* and makes an active transition for each revolution of the diskette. The $\overline{TROO}$ Line is another L.E.D. sensor that informs the 179X that the stepper motor is at its furthest position, over Track 00. The READY Line can be used for a number of functions, such as sensing "door open", Drive motor on, etc. Most drives provide a programmable READY Signal selected by option jumpers on the drive. The 179X will look at the ready signal prior to executing READ/WRITE commands. READY is *not* inspected during any Type I commands. All Type I commands will execute regardless of the Logic Level on this Line.

WRITE SIGNALS

Writing of data is accomplished by the use of the WD, WG, WF, TG43, EARLY and LATE Lines. The WG or Write Gate Line is used to enable write current at the drive's R/W head. It is made active prior to writing data on the disk. The WF or WRITE FAULT Line is used to inform the 179X of a failure in drive electronics. This signal is multiplexed with the VFOE Line and must be logically separated if required. Figure 5 illustrates three methods of demultiplexing.

The TG43 or "TRACK GREATER than 43" Line is used to decrease the Write current on the inner tracks, where bit densities are the highest. If not required on the drive, TG43 may be left open.

WRITE PRECOMPENSATION

The 179X provides three signals for double density Write Precompensation use. These signals are WRITE DATA, EARLY and LATE. When using single density drives (eighter 8" or 5¼"), Write Precompensation is not necessary and the WRITE DATA line is generally TTL Buffered and sent directly to the drive. In this mode, EARLY and LATE are left open.

For double density use, Write Precompensation is a function of the drive. Some manufacturers recommend Precompensating the 5¼" drive, while others do not. With the 8" drive, Precompensation may be specified from TRACK 43 on, or in most cases, all TRACKS. If the recommended Precompensation is not specified, check with the manufacturer for the proper configuration required.

The amount of Precompensation time also varies. A typical value will usually be specified from 100-300ns. Regardless of the parameters used, Write Precompensation must be done external to the 179X. When $\overline{DDEN}$ is tied low, EARLY or LATE will be activated at least 125ns. before and after the Write Data pulse. An Algorithm internal the 179X decides whether to raise EARLY or LATE, depending upon the previous bit pattern sent. As an example, suppose the recommended Precomp value has been specified at 150ns. The following action should be taken:

EARLY	LATE	ACTION TAKEN
0	0	delay WD by 150ns (nominal)
0	1	delay WD by 300ns (2X value)
1	0	do not delay WD

There are two methods of performing Write Precompensation:

1) External Delay elements
2) Digitally

Shown in Figure 6 is a Precomp circuit using the Western Digital 2143 clock generator as the delay element. The WD pulse from the 179X creates a strobe to the 2143, causing subsequent output pulses on the Ø1, Ø2 and Ø3 signals. The 5K Precomp adjust sets the desired Precomp value. Depending upon the condition of EARLY and LATE, Ø1 will be used for EARLY, Ø2 for nominal (EARLY = LATE = 0), and Ø3 for LATE. The use of "one-shots" or delay line in a Write Precompensation scheme offers the user the ability to vary the Precomp value. The Ø4 output resets the 74LS175 Latch in anticipation of the next WD pulse. Figure 7 shows the WD-EARLY/LATE relationship, while Figure 8 shows the timing of this write Precomp scheme.

Another method of Precomp is to perform the function digitally. Figure 9 illustrates a relationship between the WD pulse and the CLK pin, allowing a digital Precomp scheme. Figure 10 shows such a scheme with a preset Write Precompensation value of 250ns. The synchronous counter is used to generate 2MHz and 4MHz clock signals. The 2MHz clock is sent to the CLK input of the 179X and the 4MHz is used by the 4-bit shift register. When a WD pulse is not present, the 4MHz clock is shifting "ones" through the shift register and maintaining Q_D at a zero level. When a WD pulse is present, a zero is loaded at either A, B, or C depending upon the states of LATE, EN PRECOMP and EARLY. The zero is then shifted by the 4MHz clock until it reaches the Q_D output. The number of shift operations determines whether the WRITE DATA pulse is written early, nominal or late. If both FM and MFM operations is a system requirement, the output of this circuit should be disabled and the WD pulse should be sent directly to the drive.

DATA SEPARATION

The 179X has two inputs (RAW READ & RCLK) and one output (VFOE) for use by an external data separator. The RAW READ input must present clock and data pulses to the 179X, while the RCLK input provides a "window" or strobe signal to clock each RAW READ pulse into the device. An ideal Data Separator would have the leading edge of the RAW READ pulse occur in the exact center of the RCLK strobe.

Motor Speed Variation, Bit shifts and read amplifier recovery circuits all cause the RAW READ pulses to drift away from their nominal positions. As this occurs, the RAW READ pulses will shift left or right with respect to RCLK. Eventually, a pulse will make its transition outside of its RCLK window, causing either a CRC error or a Record-not-Found error at the 179X.

A Phase-Lock-Loop circuit is one method of achieving synchronization between the RCLK and RAW READ signals. As RAW READ pulses are fed to the PLL, minor adjustments of the free-running RCLK frequency can be made. If pulses are occurring too far apart, the RCLK frequency is *decreased* to keep synchronization. If pulses begin to occur closer together, RCLK is *increased* until this new higher frequency is achieved. In normal read operations, RCLK will be constantly adjusted in an attempt to match the incoming RAW READ frequency.

Another method of Data Separation is the Counter-Separator technique. The RCLK signal is again free-running at a nominal rate, until a RAW READ pulse occurs. The Separator then denotes the position of the pulse with respect to RCLK (by the counter value), and counts down to increase or decrease the current RCLK window. The next RCLK window will occur at a nominal rate and will continue to run at this frequency until another RAW READ pulse adjusts RCLK, but only the present window is adjusted.

Both PPL and Counter/Separator are acceptable methods of Data Separation. The PPL has the highest reliability because of its "tracking" capability and is recommended for 8" double density designs.

As a final note, the term "Data Separator" may be misleading, since the physical separation of clock and data bits are not actually performed. This term is used throughout the industry, and can better be described as a "Data Recovery Circuit" rather than a Data Separator.

The VFOE signal is an output from the 179X that signifies the head has been loaded and valid data pulses are appearing on the RAW READ line. It can be used to enable the Data Separator and to insure clean RCLK transitions to the 179X. Since some drives will output random pulses when the head is disengaged, VFOE can prevent an erratic RCLK signal during this time. If the Data Separator requires synchronization during a known pattern of one's or zero's, then RG (READ GATE) can be used. The RG signal will go active when the 179X is currently over a field of zeros or ones. RG is not available on the 1795/1797 devices, since this signal was replaced with the SSO (Side Select Output) Line.

Shown in Figure 11 is a 2½ IC Counter/Separator. The 74LS193 free runs at a frequency determined by the CRYCLK input. When a RAW READ pulse occurs, the counter is loaded with a starting count of '5'. When the RAW READ Line returns to a Logic 1, the counter counts down to zero and again free runs. The 74LS74 insures a 50% duty cycle to the 179X and performs a divide-by-two of the Q_D output.

Figure 12 illustrates another Counter/Separator utilizing a PROM as the count generator. Depending upon the RAW READ phase relationship to RCLK, the PROM is addressed and its data output is used as the counter value. A 16MHz clock is required for 8" double density, while an 8MHz clock can be used for single density.

Figure 13 shows a Phase-Lock-Loop data recovery circuit. The phase detector (U2, Figure 2) compares the phase of the SHAPED DATA pulse to the phase of VFO CLK ÷ 2. If VFO CLK ÷ 2 is lagging the SHAPED DATA pulse an output pulse on #9, U2 is generated. The filter/amplifier converts this pulse into a DC signal which increases the frequency of the VCO.

If, correspondingly, CLK ÷ 2 is leading the SHAPED DATA pulse, an output pulse on #5, U2 is generated. This pulse is converted into a DC signal which decreases the frequency of the VCO. These two actions cause the VCO to track the frequency of the incoming READ DATA pulses. This correction process to keep the two signals in phase is constantly occurring because of spindle speed variation and circuit parameter variations.

The operating specifications for this circuit are as follows:

Free Running Frequency	2MHz
Capture Range	± 15%
Lock Up Time	50 microsec. "1111" or "0000" Pattern 100 Microsec "1010" Pattern

The RAW READ pulses are generated from the falling edge of the SHAPED DATA pulses. The pulses are also reshaped to meet the 179X requirements. VFO CLK ÷ 2 OR 4 is divided by 2 once again to obtain VFO CLK OUT whose frequency is that required by the 179X RCLK input. RCLK must be controlled by VFOE so VFOE is sampled on each rising edge of VFO CLK OUT. When VFOE goes active EN RCLK goes active in synchronization with VFO CLK OUT preventing any glitches on the RCLK output. When VFOE goes inactive EN RCLK goes inactive in synchronization with VFO CLK OUT, again preventing any glitches on the RCLK output.

Figure 14 illustrates a PPL data recovery circuit using the Western Digital 1691 Floppy Support device. Both data recovery and Write Precomp Logic is contained within the 1691, allowing low chip count and PLL reliability. The 74S124 supplies the free-running VCO output. The PUMP UP and PUMP DOWN signals from the 1691 are used to control the 74S124's frequency.

COMMAND USAGE

Whenever a command is successfully or unsuccessfully completed, the busy bit of the status register is reset and the INTRQ line is forced high. Command termination may be detected either way. The INTRQ can be tied to the host processor's interrupt with an appropriate service routine to terminate commands. The busy bit may be monitored with a user program and will achieve the same results through software. Performing both an INTRQ and a busy bit check is not recommended because a read of the status register to determine the condition of the busy bit will reset the INTRQ line. This can cause an INTRQ from not occurring.

RESTORE COMMAND

On some disk drives, it is possible to position the R/W head outward past Track 00 and prevent the TROO line from going low unless a STEP IN is first performed. If this condition exists in the drive used, the RESTORE command will never detect a TROO. Issuing several STEP IN pulses before a RESTORE command will remedy this situation. The RESTORE and all other Type I commands will execute even though the READY bit indicates the drive is not ready (NOT READY = 1).

READ TRACK COMMAND

The READ TRACK command can be used to manually inspect data on a hard copy printout. Gaps, address marks and all data are brought in to the data register during this command. The READ TRACK command may be used to inspect diskettes for valid formatting and data fields as well as address marks. Since the 179X does not synchronize clock and data until the Index Address Mark is detected, data previous to this ID mark will not be valid. READ GATE (RG) is not actuated during this command.

READ ADDRESS COMMAND

In systems that use either multiple drives or sides, the read address command can be used to tell the host processor which drive or side is selected. The current position of the R/W head is also denoted in the six bytes of data that are sent to the computer.

TRACK	SIDE	SECTOR	CRS LENGTH	CRC 1	CRC 2

The READ ADDRESS command as well as all other Type II and Type III commands will not execute if the READY line is inactive (READY = 0). Instead, an interrupt will be generated and the NOT READY status bit will be set to a 1.

FORCED INTERRUPT COMMAND

The Forced Interrupt command is generally used to terminate a multiple sector command or to insure Type I status in the status register. The lower four bits of the command determine the conditional interrupt as follows:

1_0 = NOT-READY TO READY TRANSITION
1_1 = READY TO NOT-READY TRANSITION
1_2 = EVERY INDEX PULSE
1_3 = IMMEDIATE INTERRUPT

Regardless of the conditional interrupt set, any command that is currently being executed when the Forced Interrupt command is loaded will immediately be terminated and the busy bit will be reset indicating an idle condition.

Then, when the condition for interrupt is met, the INTRQ line will go high signifying that the condition specified has occurred.

The conditional interrupt is enabled when the corresponding bit positions of the command ($I_3 - I_0$) are set to a 1. If $I_3 - I_0$ are all set to zero, no interrupt will occur, but any command presently under execution will be immediately terminated upon receipt of the Force Interrupt command (HEX D0).

As usual, to clear the interrupt a read of the status register or a write to the command register is required. The exception is when using the immediate interrupt condition (I_3 = 1). If this command is loaded into the command register, an interrupt will be immediately generated and the current command terminated. Reading the status or writing to the command register will not automatically clear the interrupt; another forced interrupt command with $I_3 - I_0 = 0$ must be loaded into the command register in order to reset the INTRQ from this condition.

More than one condition may be set at a time. If for example, the READY TO NOT-READY condition (I_1 = 1) and the Every Index Pulse (I_2 = 1) are both set, the resultant command would be HEX "DA". The "OR" function is performed so that either a READY TO NOT-READY or the next Index Pulse will cause an interrupt condition.

DATA RECOVERY

Occasionally, the R/W head of the disk drive may get "off track", and dust or dirt may get trapped on the media. Both of these conditions will cause a RECORD NOT FOUND and/or a CRC error to occur. This "soft error" can usually be recovered by the following procedure:

1. Issue the command again
2. Unload and load the head and repeat step
3. Issue a restore, seek the track, and repeat step 1

If RNF or CRC errors are still occurring after trying these methods, a "hard error" may exist. This is usually caused by improper disk handling, exposure to high magnetic fields, etc. and generally results in destroying portions or tracks of the diskette.

FIGURE 1. DEVICE CHARACTERISTICS

DEVICE	SNGL DENSITY	DBLE DENSITY	INVERTED BUS	TRUE BUS	DOUBLE-SIDED
1791	X	X	X		
1792	X		X		
1793	X	X		X	
1794	X			X	
1795	X	X	X		X
1797	X	X		X	X

FIGURE 2. STORAGE CAPACITIES

SIZE	DENSITY	SIDES	UNFORMATTED CAPACITY (NOMINAL)		BYTE TRANSFER TIME	FORMATTED CAPACITY	
			PER TRACK	PER DISK		PER TRACK	PER DISK
5¼″	SINGLE	1	3125	109,375*	64μs	2304**	80,640
5¼″	DOUBLE	1	6250	218,750	32μs	4608***	161,280
5¼″	SINGLE	2	3125	218,750	64μs	2304	161,280
5¼″	DOUBLE	2	6250	437,500	32μs	4608	322,560
8″	SINGLE	1	5208	401,016	32μs	3328	256,256
8″	DOUBLE	1	10,416	802,032	16μs	6656	512,512
8″	SINGLE	2	5208	802,032	32μs	3328	512,512
8″	DOUBLE	2	10,416	1,604,064	16μs	6656	1,025,024

*Based on 35 Tracks/Side
**Based on 18 Sectors/Track (128 byte/sec)
***Based on 18 Sectors/Track (256 bytes/sec)

FIGURE 3. NOMINAL VS. WORSE CASE SERVICE TIME

SIZE	DENSITY	NOMINAL TRANSFER TIME	WORST-CASE 179X SERVICE TIME	
			READ	WRITE
5¼"	SINGLE	64μs	55.0μs	47.0μs
5¼"	DOUBLE	32μs	27.5μs	23.5μs
8"	SINGLE	32μs	27.5μs	23.5μs
8"	DOUBLE	16μs	13.5μs	11.5μs

FIGURE 4A. FM RECORDING

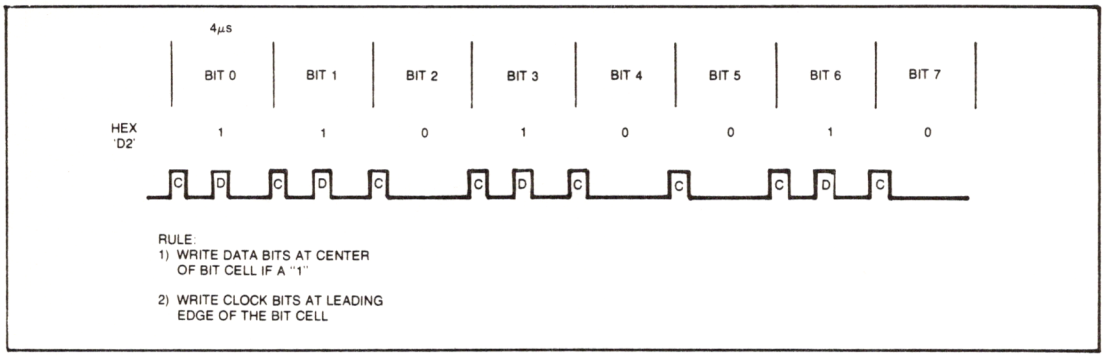

FIGURE 4B. MFM RECORDING

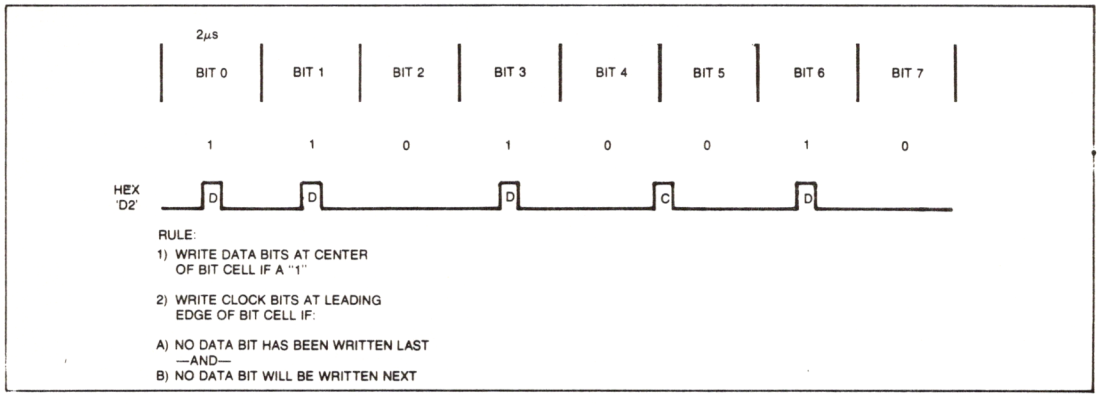

FIGURE 5. WF/VFOE DEMULTIPLEXING CIRCUITRY

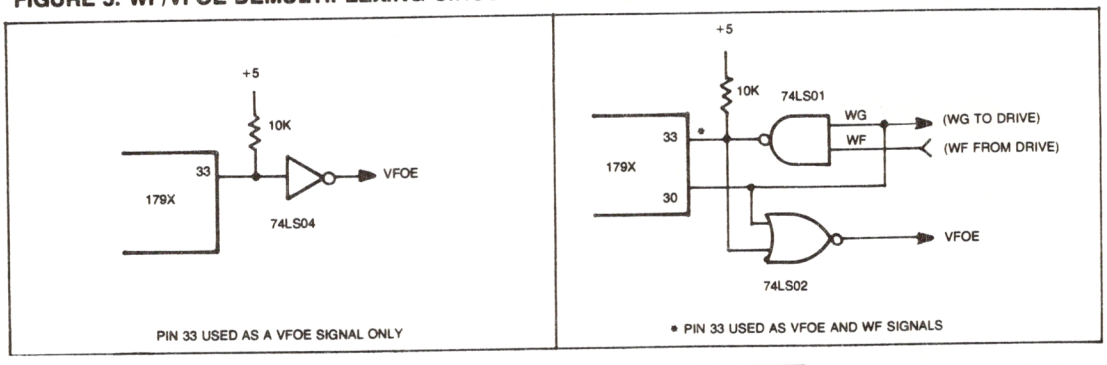

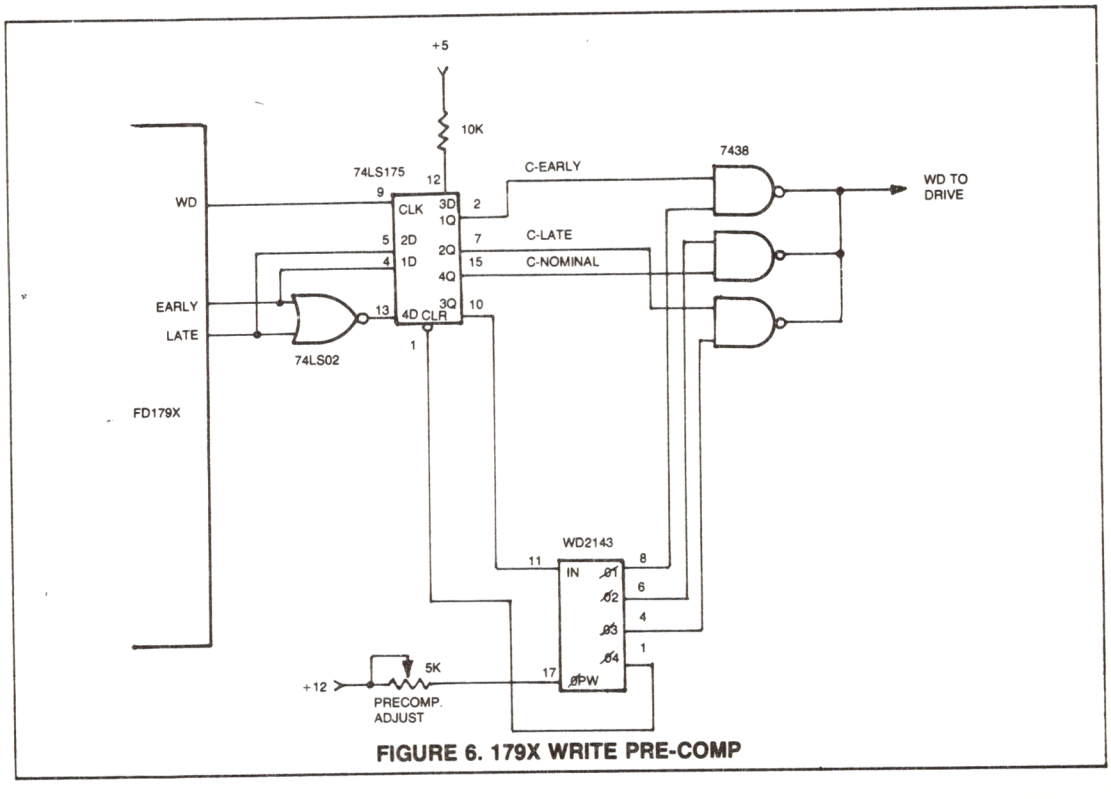

FIGURE 6. 179X WRITE PRE-COMP

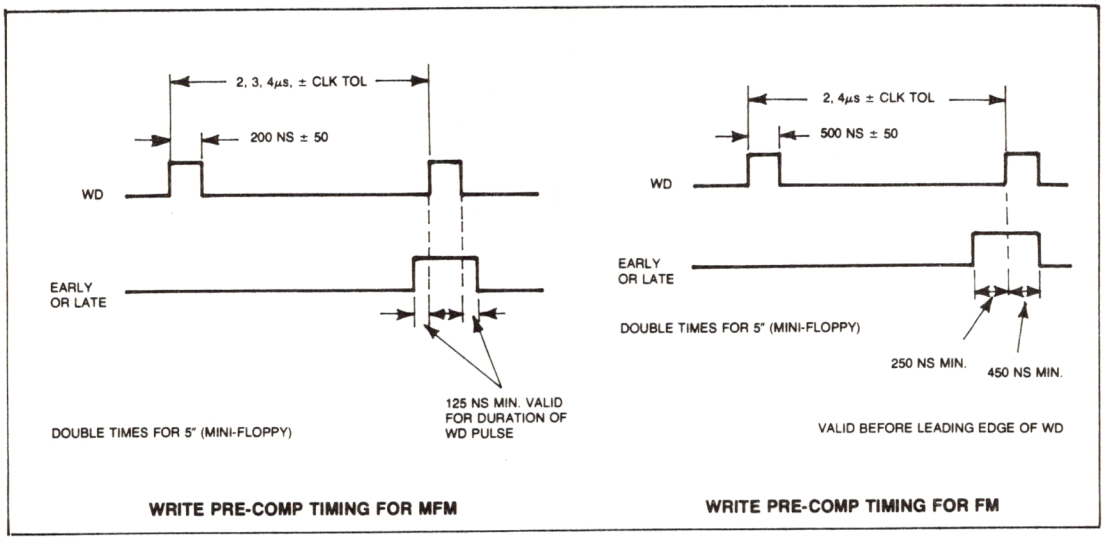

FIGURE 7. WRITE PRE-COMP TIMING

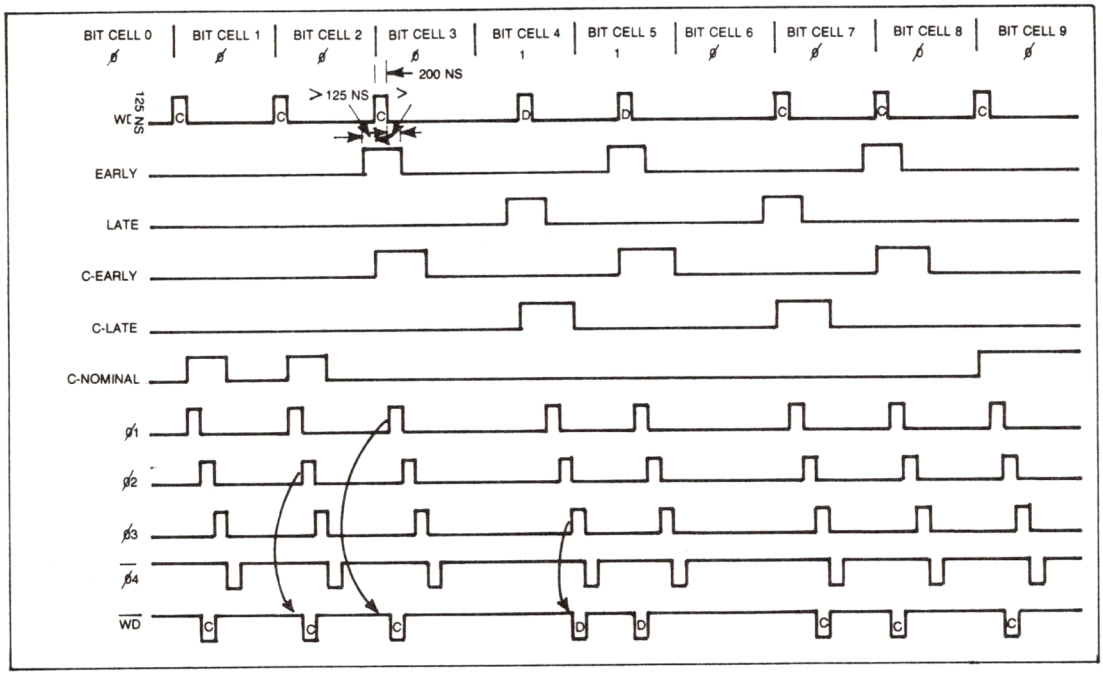

FIGURE 8. PRECOMP TIMING FOR CIRCUIT IN FIGURE 6

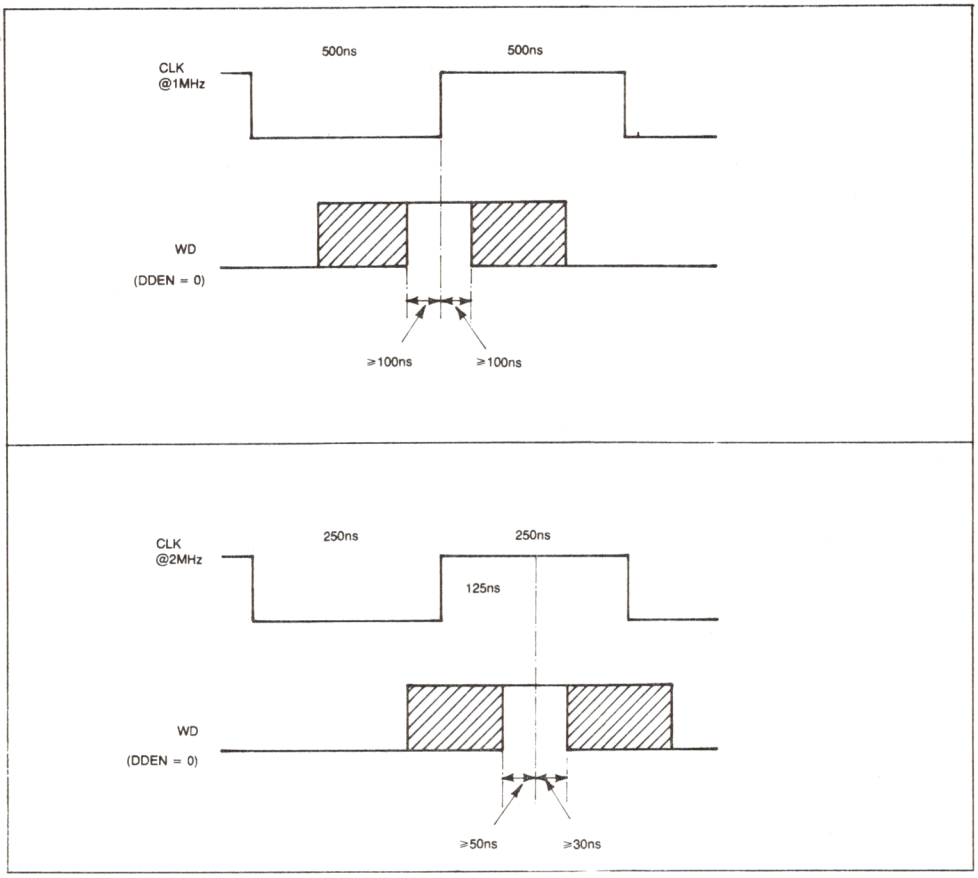

FIGURE 9. WD/CLK RELATIONSHIP FOR WRITE PRECOMP USE

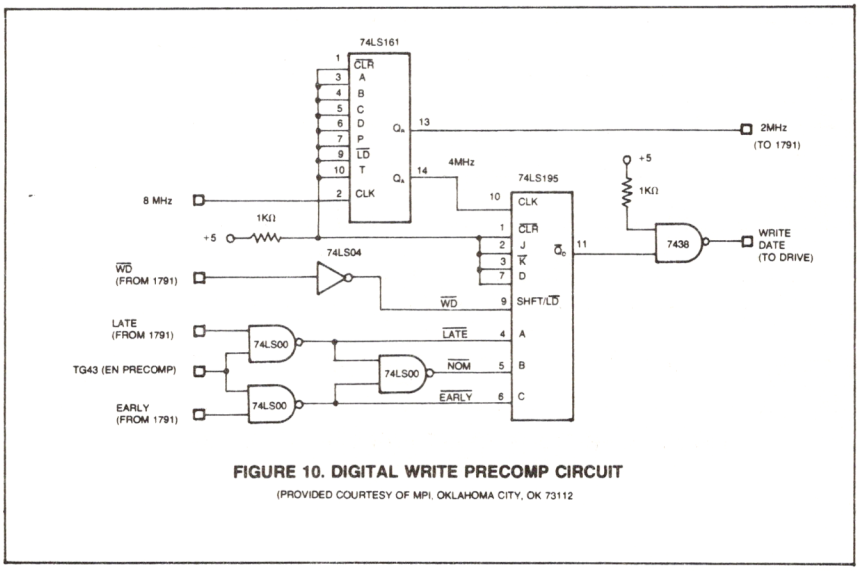

FIGURE 10. DIGITAL WRITE PRECOMP CIRCUIT

(PROVIDED COURTESY OF MPI, OKLAHOMA CITY, OK 73112

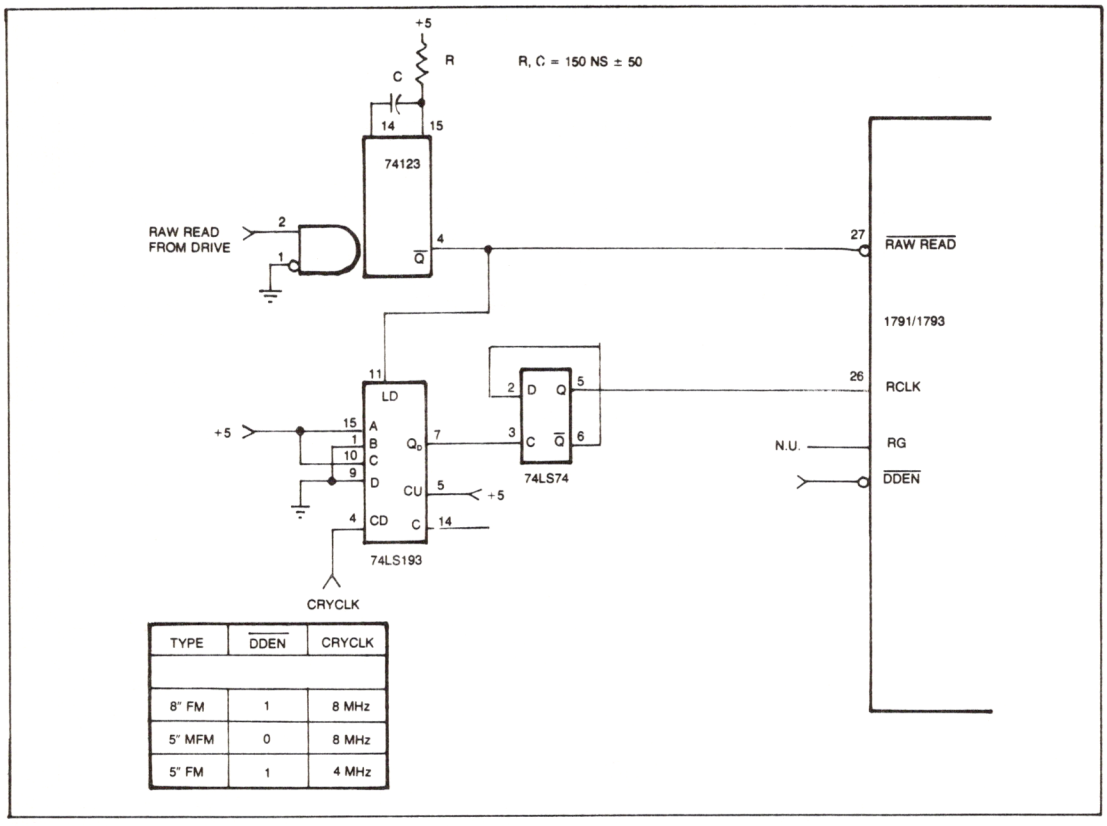

TYPE	$\overline{\text{DDEN}}$	CRYCLK
8" FM	1	8 MHz
5" MFM	0	8 MHz
5" FM	1	4 MHz

FIGURE 11. COUNTER/SEPARATOR

745288 PROGRAMMING TABLE

ADDRESS	DATA	ACTION TAKEN
00	01	NONE
01	01	RETARD BY 1 COUNT
02	02	
03	03	
04	03	RETARD BY 2 COUNTS
05	04	
06	05	
07	06	
08	0B	ADVANCE BY 2 COUNTS
09	0D	
0A	0C	
0B	0E	
0C	0F	
0D	0F	ADVANCE BY 1 COUNT
0E	00	
0F	01	
10	01	FREE RUN
11	02	
12	03	
13	04	
14	05	
15	06	
16	07	
17	08	
18	09	
19	0A	
1A	0B	
1B	0C	
1C	0D	
1D	0E	
1E	0F	
1F	00	

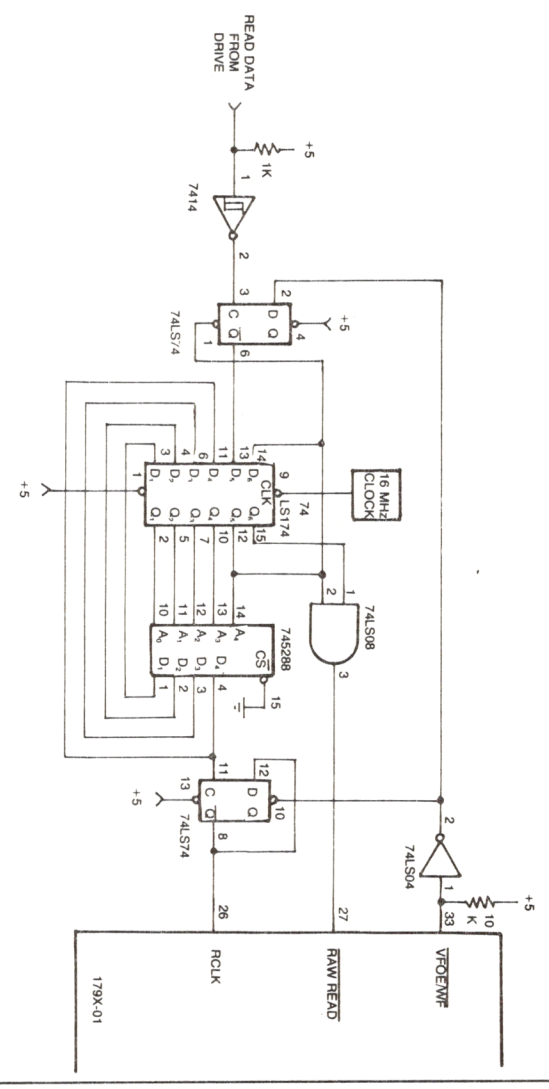

FIGURE 12. 179X DATA SEPARATOR

(PROVIDED COURTESY OF ANDROMEDA SYSTEMS, PANORAMA CITY, CA 91402)

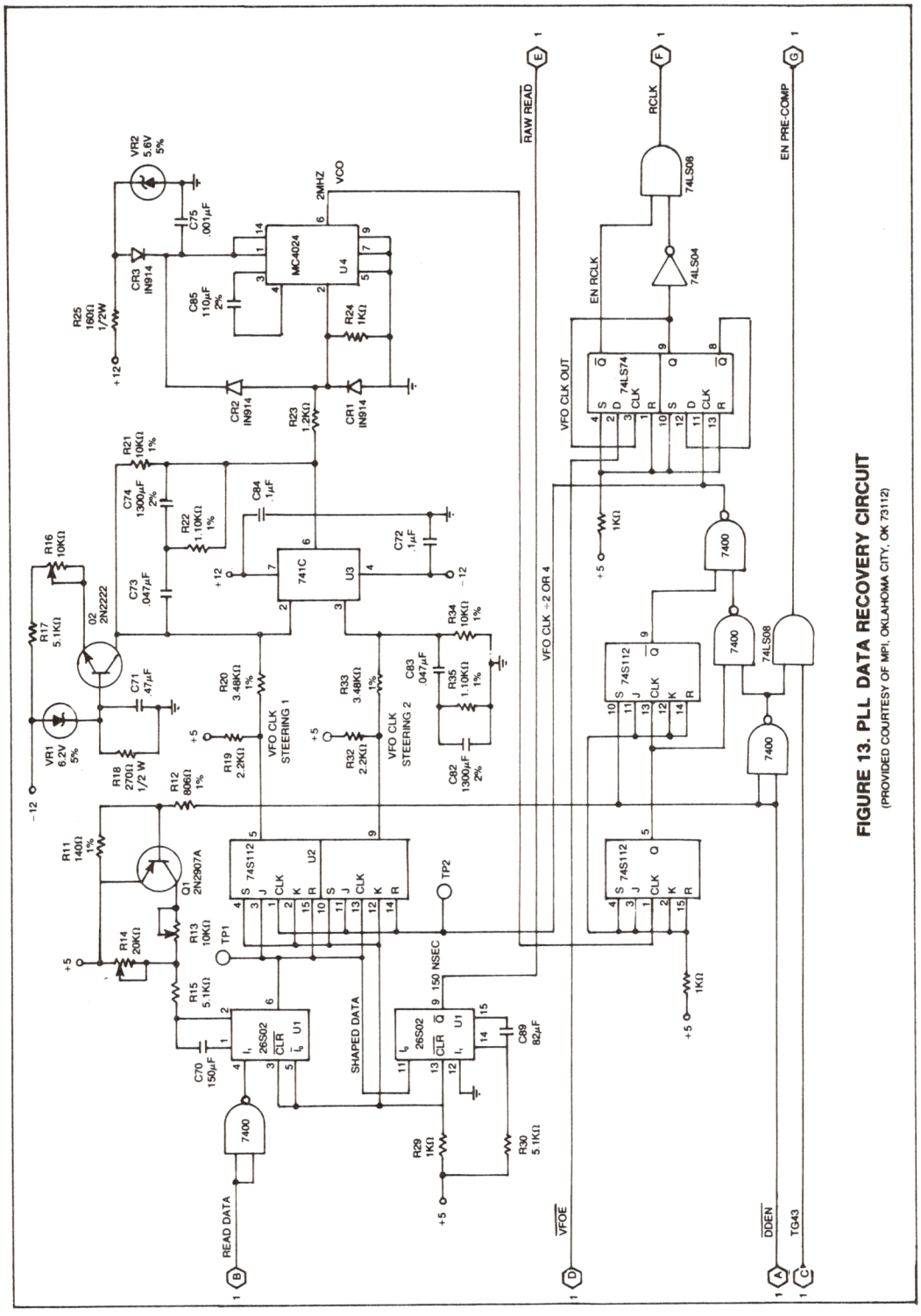

FIGURE 13. PLL DATA RECOVERY CIRCUIT

(PROVIDED COURTESY OF MPI, OKLAHOMA CITY, OK 73112)

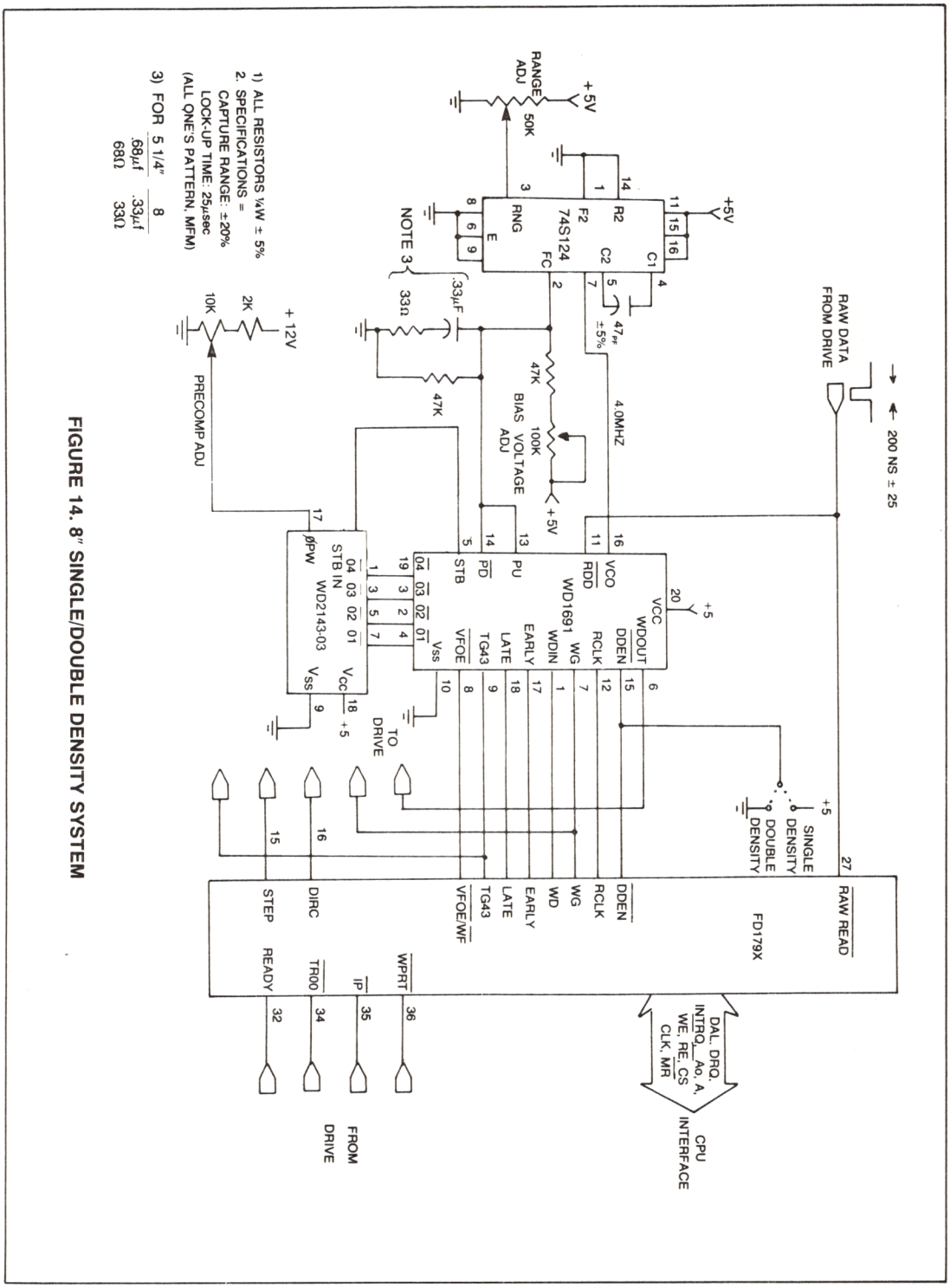

FIGURE 14. 8" SINGLE/DOUBLE DENSITY SYSTEM

APPENDIX B. DISK MASTER SCHEMATIC

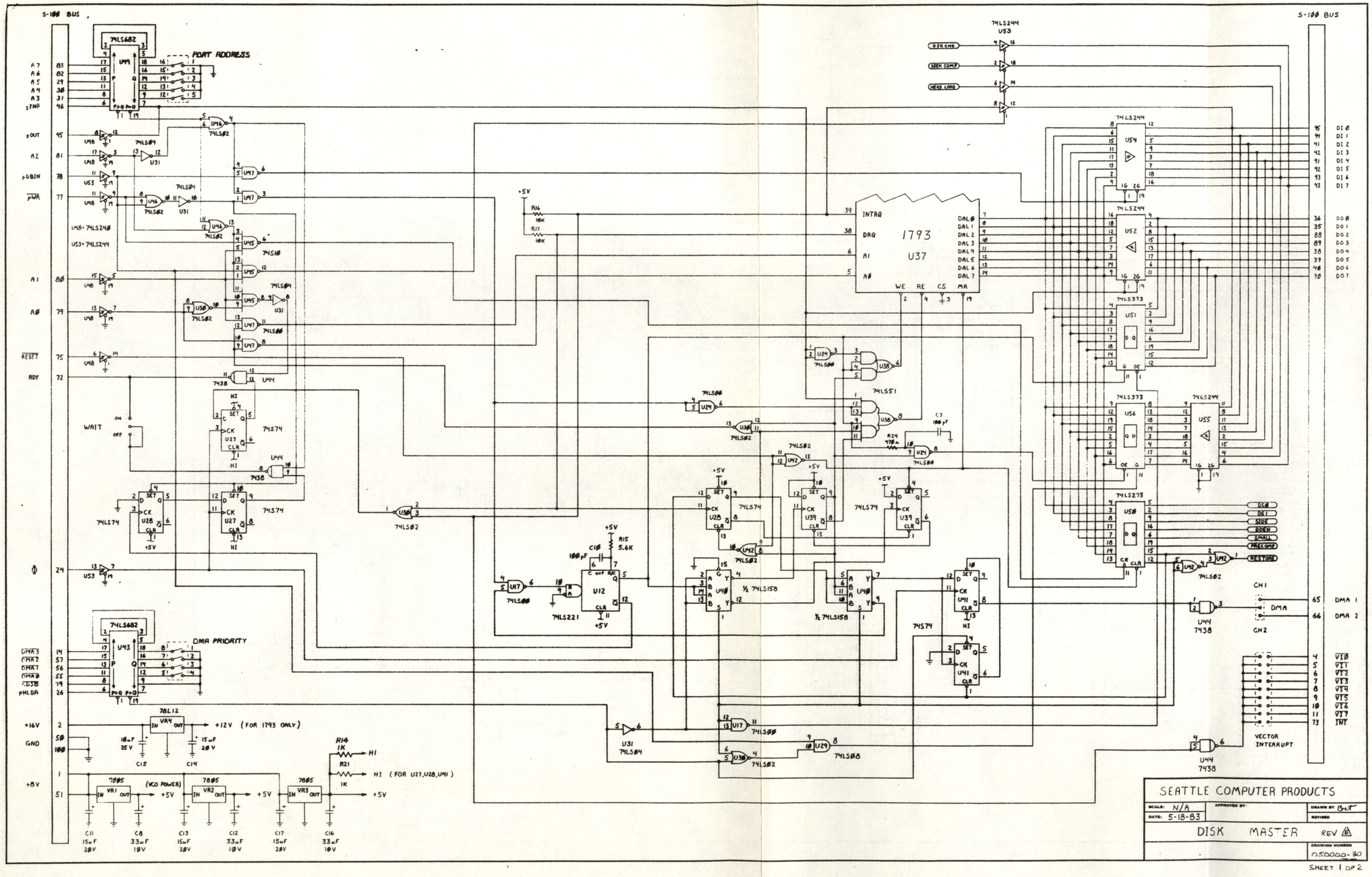

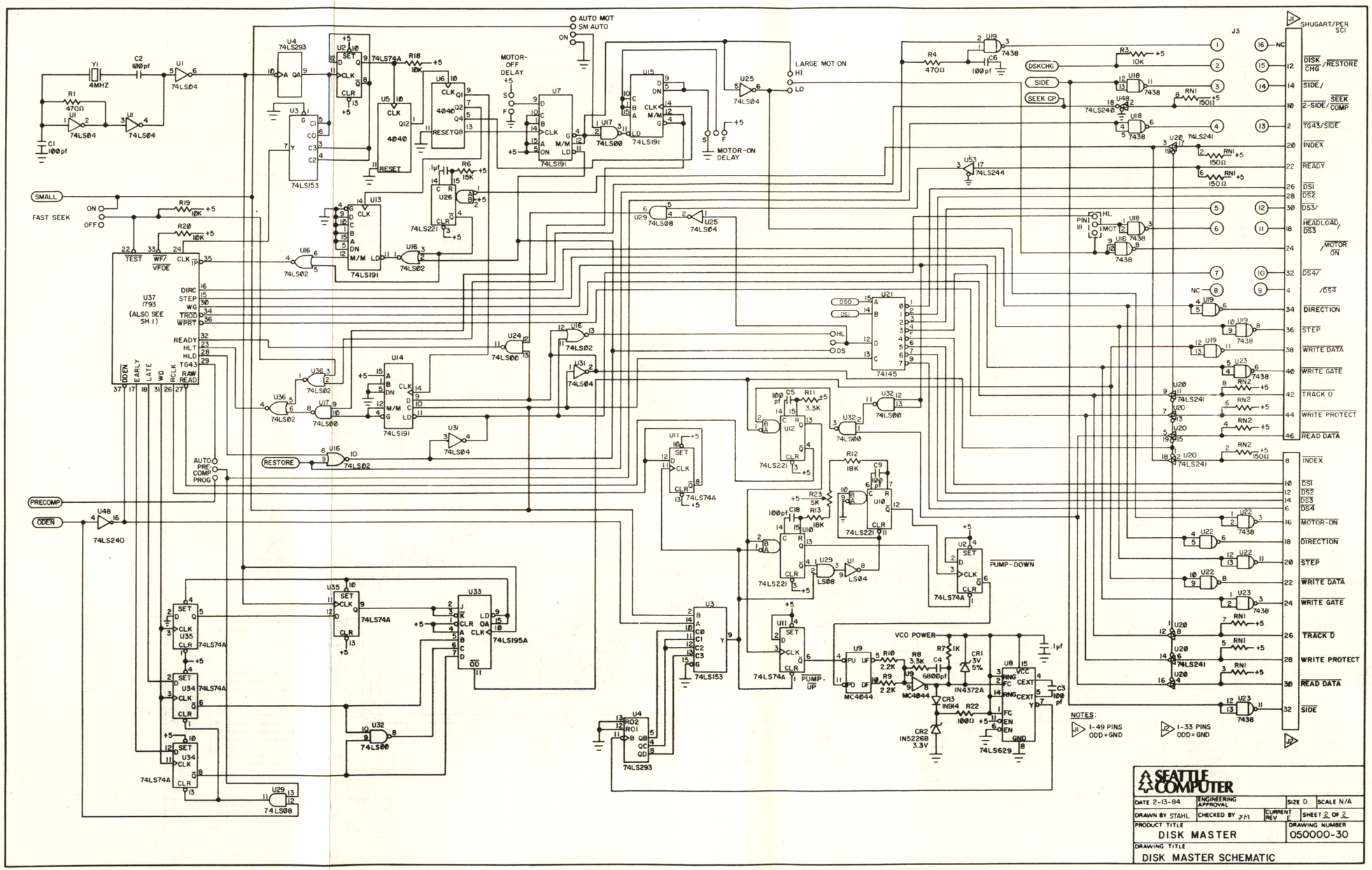
AUTO MOT
SM AUTO
ON
LARGE MOT ON
HI
LO
MOTOR-ON DELAY
MOTOR-OFF DELAY
SHUGART/PER SCI
J3
DSKCHG
SIDE
SEEK CP
SMALL
FAST SEEK
ON
OFF
PRECOMP
ODEN
AUTO
PRE-COMP
PROG
RESTORE
PUMP-DOWN
PUMP-UP
VCO POWER
NOTES:
1-49 PINS ODD=GND
1-33 PINS ODD=GND
SEATTLE COMPUTER
DATE 2-13-84
ENGINEERING APPROVAL
SIZE D
SCALE N/A
DRAWN BY STAHL
CHECKED BY JPM
CURRENT REV E
SHEET 2 OF 2
PRODUCT TITLE
DISK MASTER
DRAWING NUMBER
050000-30
DRAWING TITLE
DISK MASTER SCHEMATIC

APPENDIX C. SPECIFICATIONS

IEEE-696 Standard (S-100)	Fully compatible with the IEEE-696 specifications.
Controller Chip	Uses the Western Digital 1793 controller for reliability and high performance.
I/O Mapped	Saves memory space over memory mapped options.
User Options	
Port Address Switch	Configurable to any 8-port group within a 256-port address range.
Interrupt Option	Configurable to any of the IEEE-696 hardware interrupt lines.
Wait-State Jumper	Allows automatic insertion of wait states when used with high-speed CPU boards.
DMA Prioritizing	For compatibility with other DMA devices in the system.
Drive Motor Control	For both 8-inch and 5.25-inch disk drives.
Write Precompensation Control	Either under software or hardware control.
Fast Seek Option	For use with voice coil head positioner.
Head Load Option	Configurable for older full-height 8-inch drives, or the new half-height drives.
Configuration DIP Header	For adapting to various pinout designations of 8-inch drives.
Noise Margins	All signal inputs to the board have a minimum of 0.4V hysteresis at $25^{0}C$.

Specifications

Power Requirements	+8V at 1.6A; +16V at 90 mA (at 25^{0}C)
Operating Environments	0^{0}C to 70^{0}C.
Reliability	The DiskMaster board has been in production for about one year. The demonstrated performance to date indicates that a reliability rate in excess of 98% will be typical.

90-DAY LIMITED WARRANTY

WARRANTY AND WARRANTY PERIOD

When sold by Seattle Computer Products (hereinafter referred to as SCP) or through an authorized SCP dealer, this product is warranted to the original purchaser and all subsequent owners of the product for a period of 90 days from the time the product is first sold at retail and for such additional time as the product may be out of the owner's possession for the purpose of receiving warranty service at the factory. When sold to the end-user by an OEM, the warranty terms vary. Consult your OEM for specific warranty coverage.

WARRANTY COVERAGE

This product is warranted to be free from defects of material and workmanship and to perform within its specifications as detailed in the instruction or operating manual during the period of the warranty. This warranty does not cover damage and is void if the product has been damaged by neglect, accident, unreasonable use, improper repair, or other causes not arising out of defects in material or workmanship.

WARRANTY PERFORMANCE

During the warranty period, SCP will repair or replace defective boards or products or components of boards or products upon written notice that a defect exists. Certain high value parts may have to be returned to SCP prior to replacement. Other components will be replaced without the part having to be returned to the factory with the exception that SCP retains the right in all cases to examine the defective board or other products prior to the item's replacement under the warranty. In the event the return of the board, product, or component is requested by SCP under this warranty, the owner shall ship the item prepaid to the SCP factory. SCP will pay for shipment of replacement items back to the owner. All repairs or replacements under this warranty will be performed by SCP within five working days of receipt of notice of defect or return of components as called for under this warranty.

WARRANTY DISCLAIMERS

While high reliability was a major design factor for this product and care was used in its manufacture, no certainty can be achieved that any particular product will operate correctly for any specific time. No representation is made by SCP that this product will not fail in normal use. Because of the inability to guarantee 100% reliability, SCP shall not be liable for any consequential damage the user may suffer because the product fails to function reliably 100% of the time. Any implied warranties arising from the sale of this product are limited in duration to the warranty period defined above.

LEGAL REMEDIES

This warranty gives the purchaser specific legal rights. He may have additional rights which vary from state to state.

SHIPPING INSTRUCTIONS

In the event it becomes necessary to return the product or component to SCP:

1. Telephone (206) 575-1830 to obtain an RMA number. No products will accepted by SCP without an RMA number.

2. Package the product in a crushproof container with adequate packing material to prevent damage.

3. Return the product along with proof of purchase and a written explanation of the difficulty encountered along with your name, address, and phone number. Send the product to Seattle Computer Products, 1114 Industry Drive, Seattle WA 98188.

Cut along line

Comment Form

Use this form to comment on this product and to report errors in the manual.

System Description:

CPU: Manufacturer _____ Model No. _____

Memory: Manufacturer _____ Model No. _____

Memory Size _____

Disk Controller: Manufacturer _____ Model No. _____

I/O Interfaces: Manufacturer _____ Model No. _____

Other _____

_____

_____

Comments:

Name _____ Company _____

Street _____

City _____ State _____ Zip _____

Phone _____ Date _____

Cut along line

Fold and tape

Place stamp here

Seattle Computer Products
1114 Industry Drive
Seattle, WA 98188

Attention: Hardware Support

Fold and tape